SLOAN®

Code No. 0816496
Rev. 6 (09/22)

# INSTALLATION INSTRUCTIONS FOR SLOAN SF SERIES ELECTRONIC SENSOR ACTIVATED LAVATORY FAUCETS

**SF-2100 Series**

Adapter Powered with Battery Backup, Sensor Activated, Pedestal Style Lavatory Faucets

**SF-2150 Series**

Battery Powered, Sensor Activated, Pedestal Style Lavatory Faucets

**SF-2300 Series**

Adapter Powered with Battery Backup Sensor Activated, 4" Centerset Lavatory Faucets

**SF-2350 Series**

Battery Powered, Sensor Activated 4" Centerset Lavatory Faucets

**SF-2200 Series**

Adapter Powered with Battery Backup Sensor Activated, Gooseneck Style Lavatory Faucets

**SF-2250 Series**

Battery Powered, Sensor Activated Gooseneck Style Lavatory Faucets

**SF-2400 Series**

Adapter Powered with Battery Backup, Sensor Activated, Pedestal Style Lavatory Faucets

**SF-2450 Series**

Battery Powered, Sensor Activated, Pedestal Style Lavatory Faucets

**SF-2800 Series**

Adapter Powered with Battery Backup Sensor Activated, Wall Mounted Lavatory Faucets

**SF-2850 Series**

Battery Powered, Sensor Activated Wall Mounted Lavatory Faucets

NOTE: rear access required to mount SF-2800 series faucet. Solid wall substrate required (no drywall or drywall backed tile).

**SF-2900 Series**

Adapter Powered with Battery Backup

Sensor Activated, Deck Mounted, Lavatory Faucets

**SF-2950 Series**

Battery Powered, Sensor Activated, Deck Mounted, Lavatory Faucets

**SLOAN® LIMITED WARRANTY SUMMARY**

Sloan Valve Company ("Sloan"), warrants its products against defects in materials and workmanship, excluding damage caused by matters beyond Sloan's reasonable control. Instructions for filing claims can be found in the Limited Warranty which can be obtained at www.Sloan.com or by requesting a free copy by telephone at 888.756.2614. Sloan will repair or replace your defective product, or provide a refund, as your exclusive remedy. *This is only a general summary of Sloan's Limited Warranty so it is important to note that the specific terms, conditions, limitations and exclusions, including the duration of warranty coverage for your particular Sloan product, are contained in the actual Sloan Limited Warranty. The Limited Warranty is subject to applicable laws in your country, state, province or other jurisdiction—and disputes arising under the Limited Warranty are to be resolved by binding arbitration unless you provide Sloan with an opt-out notice no later than 30 days after your purchase date. In case of a conflict with this summary, the terms and conditions set forth in the complete Limited Warranty will prevail.*

## PRIOR TO INSTALLATION

Prior to installing the Sloan SF Series Electronic Lavatory Faucet, install the items listed below. Also, refer to the appropriate rough-in diagram.

- **Plug-In Adapter**
  **Models SF-2100/SF-2200/SF-2300/SF-2400/SF-2800/SF-2900 only** — Install electrical receptacle(s) for plug-in adapter(s) — 120 VAC, 1 amp service for each 6 VDC plug-in adapter used.
  International models may be supplied with a 220 VAC/VDC transformer.
- Hot and cold water supply lines or tempered water supply line
- 6 VDC plug-in adapter must be used for AC applications.

**Important:**

- **INSTALL ALL ELECTRICAL WIRING IN ACCORDANCE WITH NATIONAL/LOCAL CODES AND REGULATIONS.**
- **INSTALL ALL PLUMBING IN ACCORDANCE WITH APPLICABLE CODES AND REGULATIONS.**
- **FLUSH SUPPLY LINES.**
- **BEFORE CONNECTING COPPER TUBE(S)/FLEX HOSE(S) TO SUPPLY STOP(S), FLUSH ALL WATER LINES UNTIL WATER IS CLEAR**

## TOOLS REQUIRED FOR INSTALLATION

- Electric drill for drilling anchor holes (1/4" or 6 mm drill bit)
- Straight blade and phillips blade screwdrivers
- Open end wrenches (9, 11, 13, 16, 22 mm)

The components supplied with International Models of the SF Series Faucets may vary from what is shown in this manual. Consult factory to identify variations that may apply to your market.

# FAUCET ROUGH-IN

## SF-2100 / SF-2150 Series

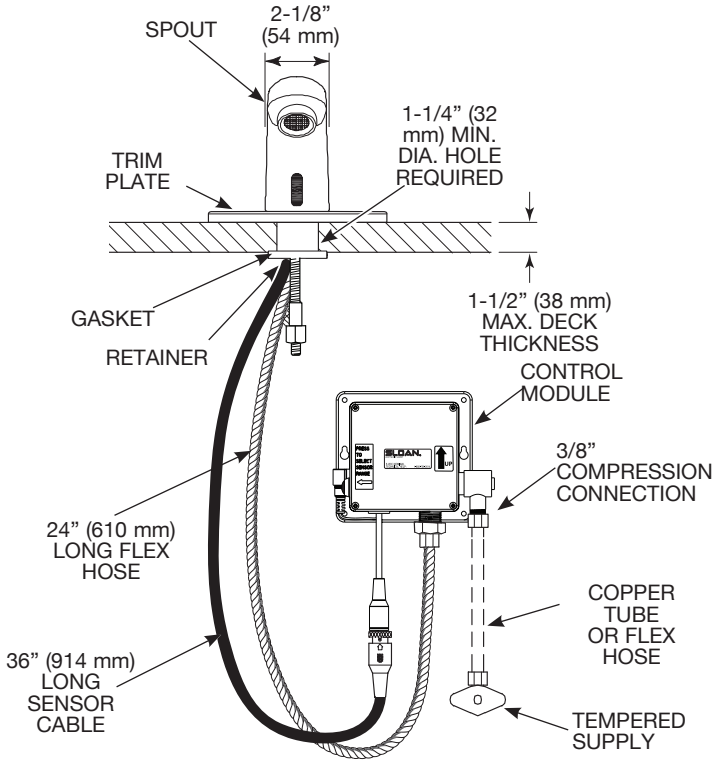


**HOT AND COLD WATER SUPPLY APPLICATIONS**

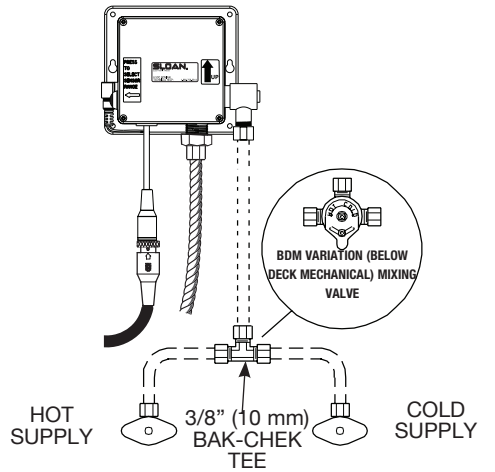


COPPER TUBES OR FLEX HOSES - **Flex Hoses Supplied Only with some International Models.**

## SF-2200 / SF-2250 Series

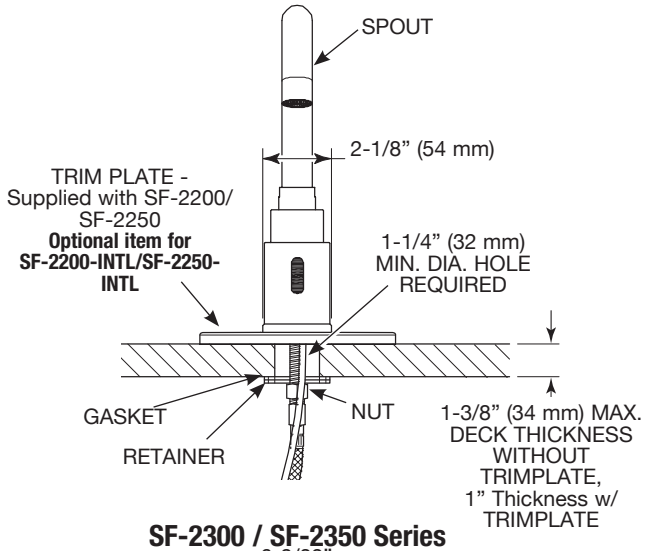


## SF-2300 / SF-2350 Series

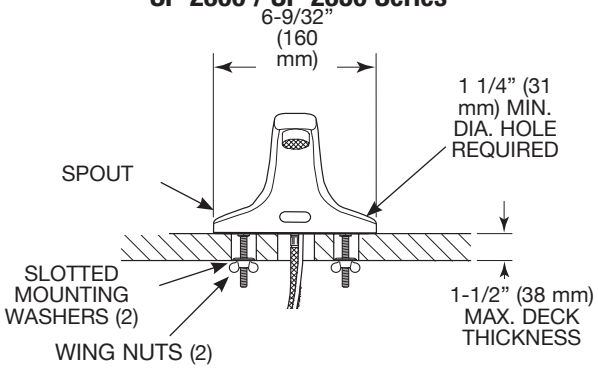


## SF-2400 / SF-2450 Series

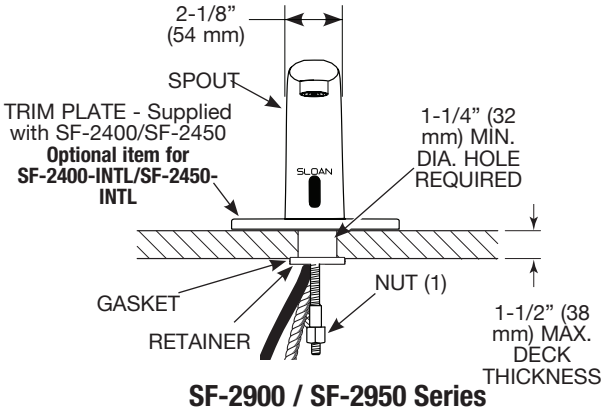


## SF-2800 / SF-2850 Series

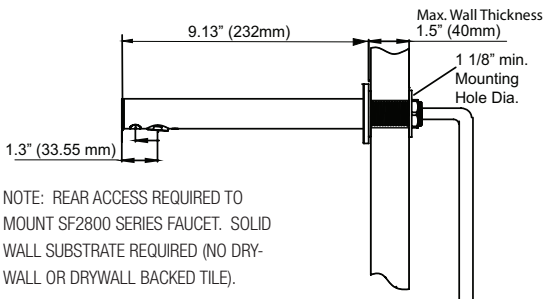


NOTE: REAR ACCESS REQUIRED TO MOUNT SF2800 SERIES FAUCET. SOLID WALL SUBSTRATE REQUIRED (NO DRY-WALL OR DRYWALL BACKED TILE).

## SF-2900 / SF-2950 Series

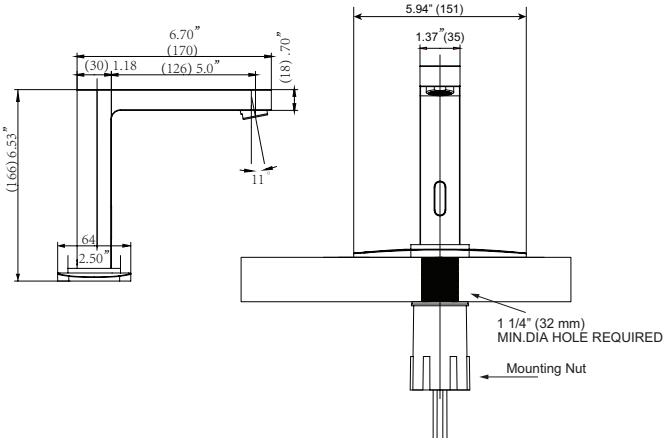

# SIDE VIEW

## SF-2100 / SF-2150 Series

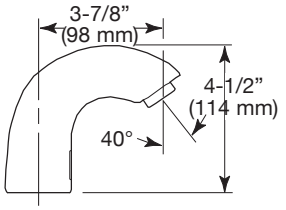


SIDE VIEW

## SF-2200 / SF-2250 Series

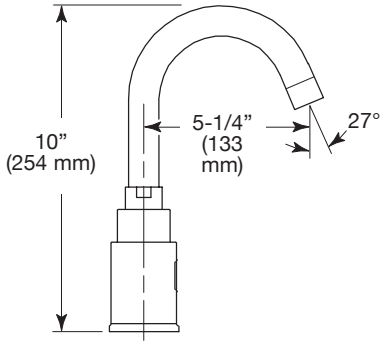


## SF-2300 / SF-2350 Series

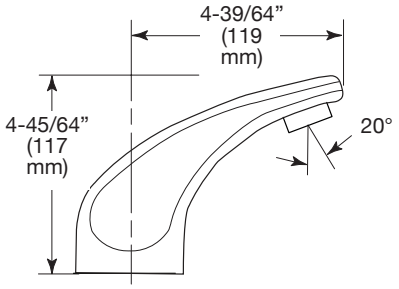


## SF-2400 / SF-2450 Series

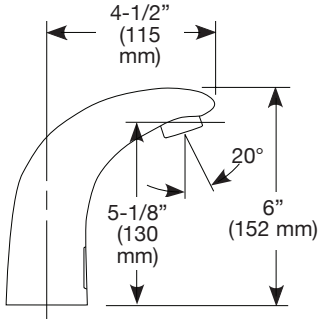


## SF-2800 / SF-2850 Series

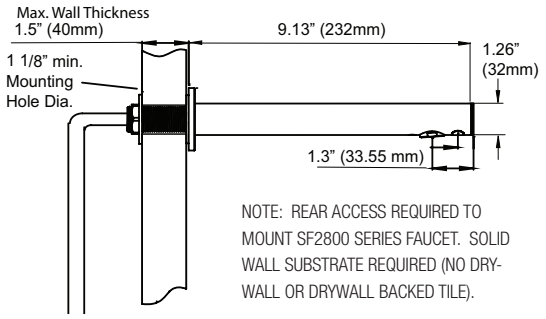


## SF-2900 / SF-2950 Series

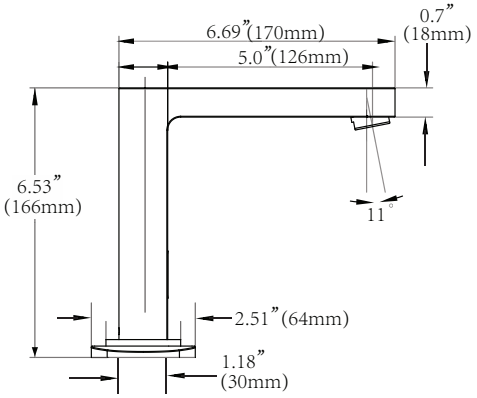

## 1A - SF-2100/2150 & SF-2400/2450 SERIES: INSTALL FLEX HOSE AND MOUNTING STUD

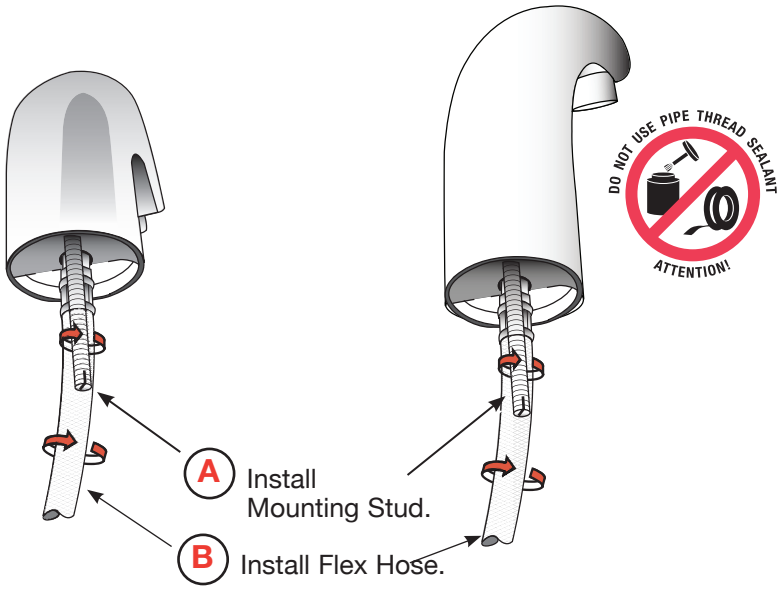


NOTE: TRIM PLATES ARE OPTIONAL ON SINGLE HOLE MOUNT SINKS"

## 1B - SF-2200/2250 & SF-2300/2350 SERIES: INSTALL FLEX HOSE

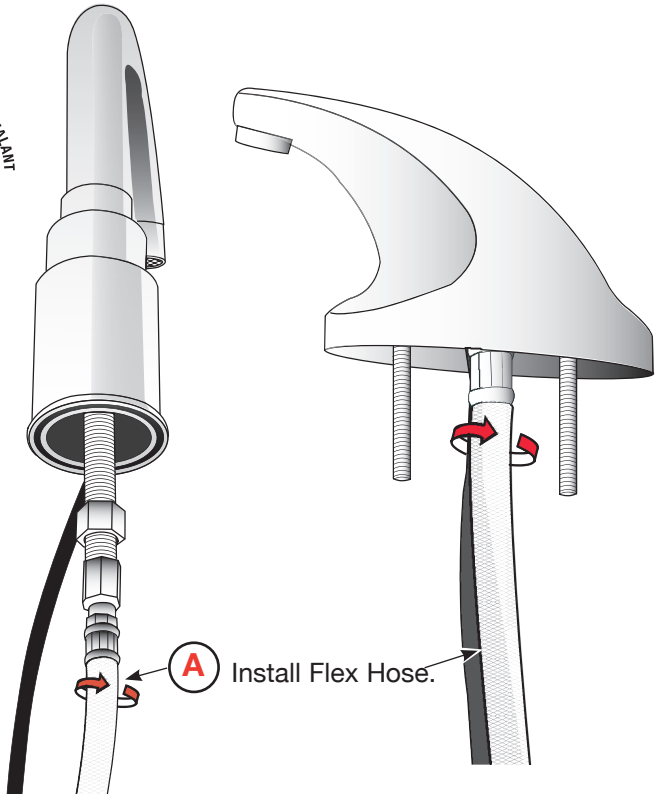


## 1C - SF-2900/2950 SERIES: PRE-NSTALLED FLEX HOSE

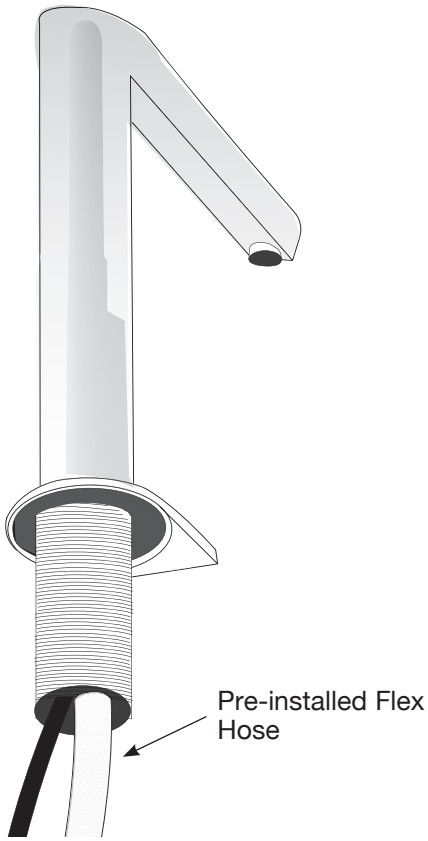


## 1D - SF-2800/2850 SERIES: PRE-NSTALLED FLEX HOSE

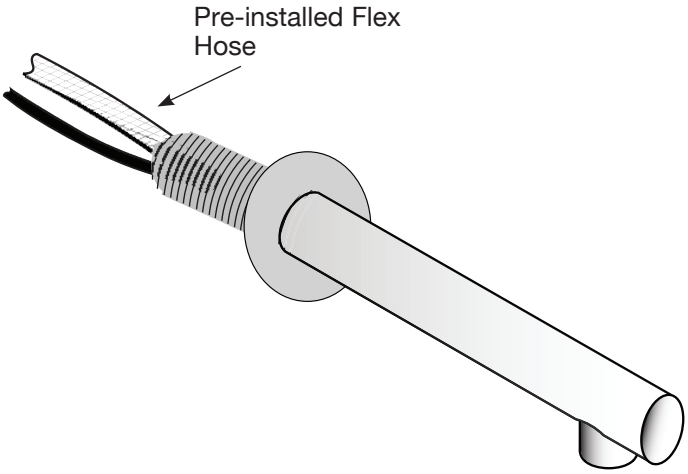


NOTE: REAR ACCESS REQUIRED TO MOUNT SF2800 SERIES FAUCET. SOLID WALL SUBSTRATE REQUIRED (NO DRYWALL OR DRYWALL BACKED TILE).

## 2A - SF-2100/2150, SF-2200/2250, & SF-2400/2450 SERIES: INSTALL SPOUT, TRIM PLATE AND SPACER

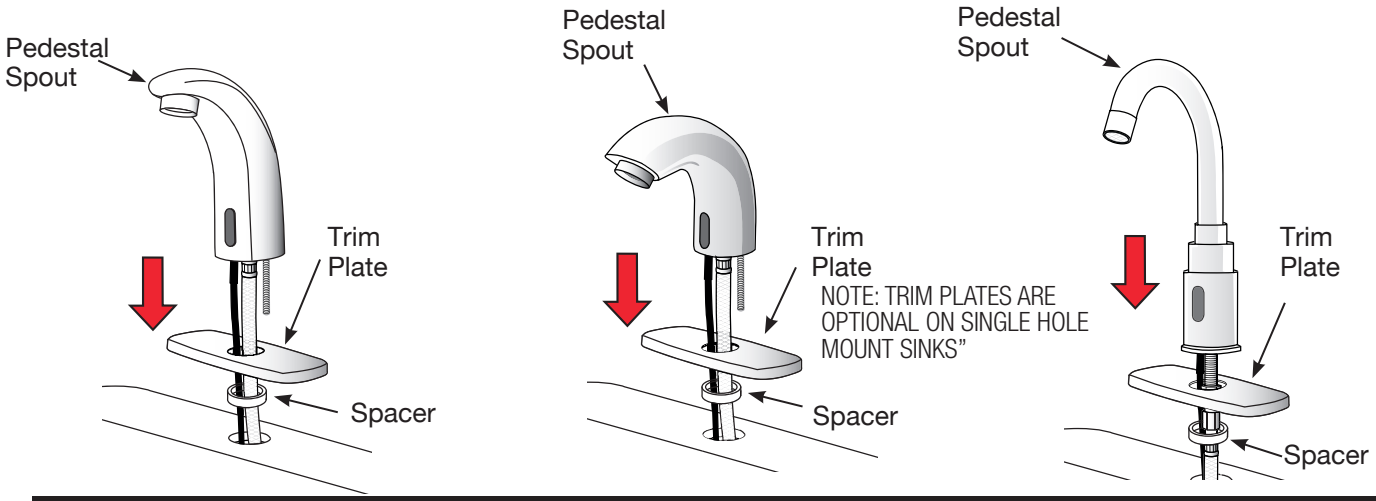


## 2B - SF-2300/2350 SERIES: INSTALL SPOUT

(A) Insert gasket on the Faucet underbody.

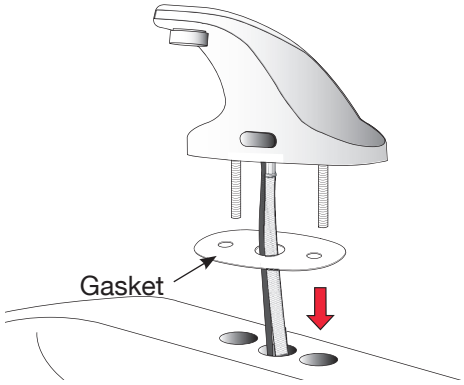


## 2D - SF-2900/2950 SERIES INSTALL SPOUT TRIM PLATE & SF-2800/2850 SERIES INSTALL WALL FLANGE, SPACER & MOUNTING NUT

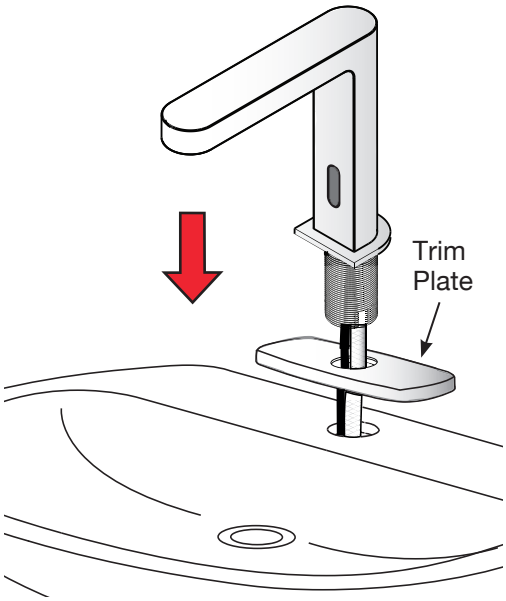


NOTE: REAR ACCESS REQUIRED TO MOUNT SF2800 SERIES FAUCET. SOLID WALL SUBSTRATE REQUIRED (NO DRYWALL OR DRYWALL BACKED TILE).

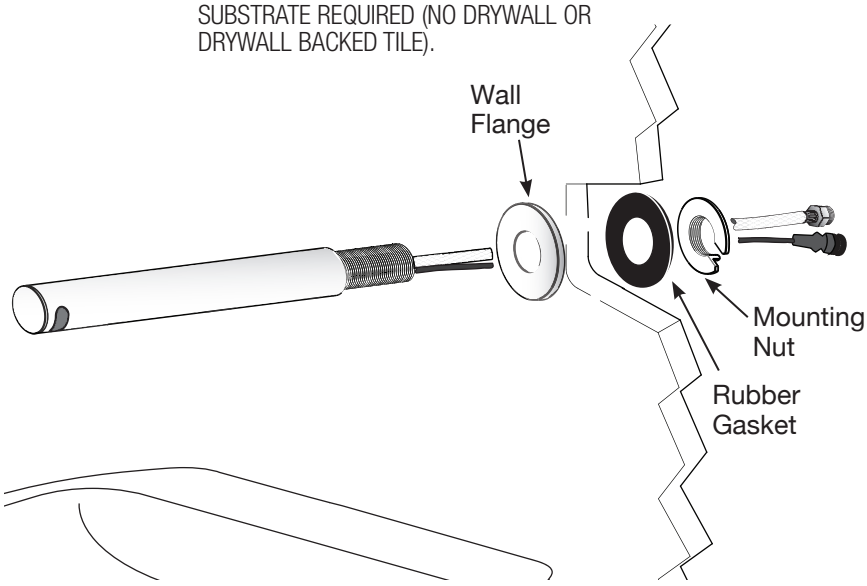

## 3A - SF-2100/2150 & SF-2200/2250 SERIES: INSTALL RUBBER GASKET, RETAINER, AND RETAINER NUT(S)

**A** Secure Faucet to the Deck by installing Rubber Gasket, Retainer and Retainer Nut(s). Tighten Retainer Nuts securely. Do not overtighten.

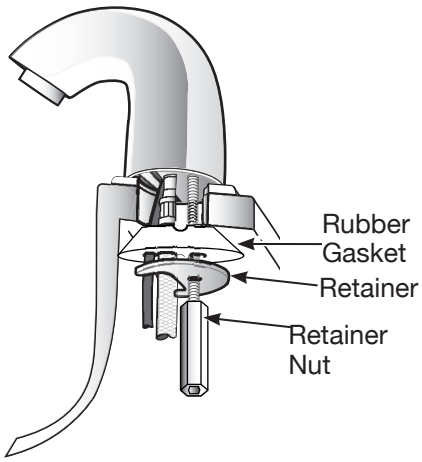


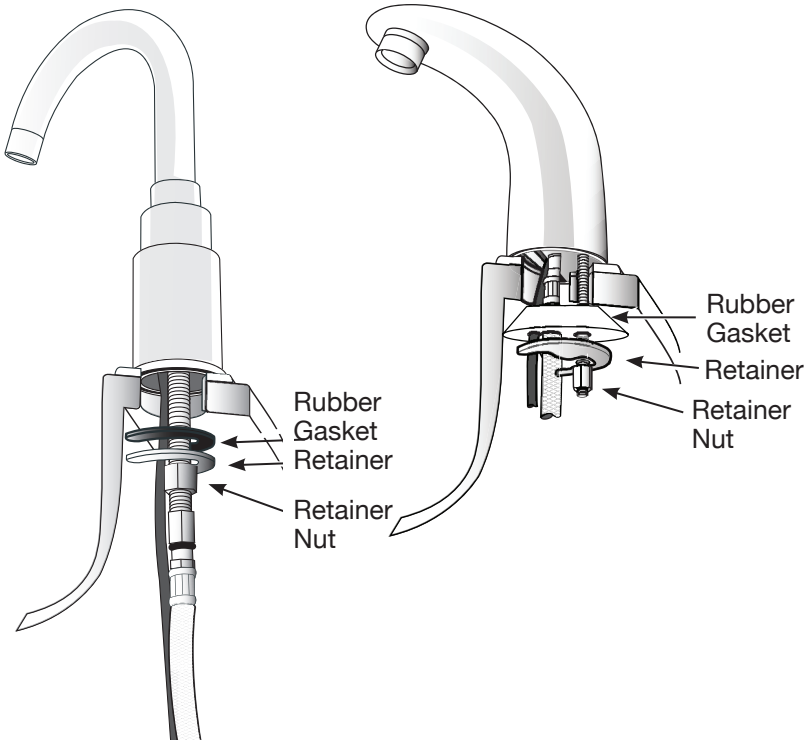


## 3B - SF-2300/2350 SERIES: INSTALL SLOTTED MOUNTING WASHERS AND WING NUTS

**A** Secure Faucet to the Deck by installing Slotted Mounting Washers and Wing Nuts. Tighten Wing Nuts securely. Do not overtighten.

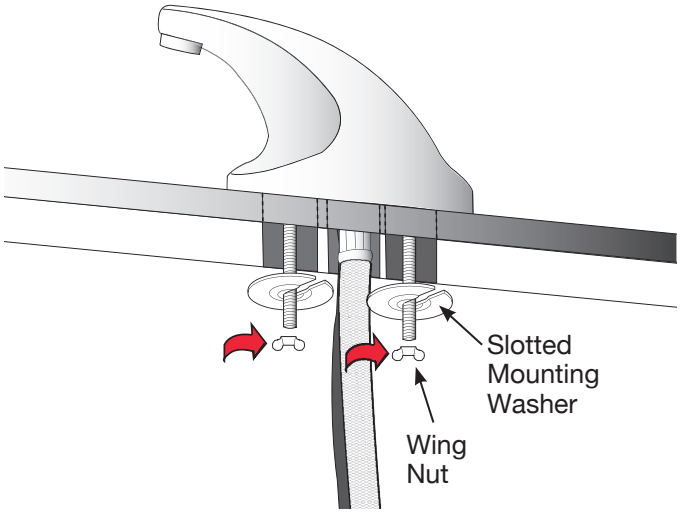

## 3C - SF-2800/2850 SERIES: INSTALL SLOTTED MOUNTING NUT

**A** Secure Faucet to the Deck by installing Slotted Mounting Nut. Tighten Nut securely. Do not overtighten.

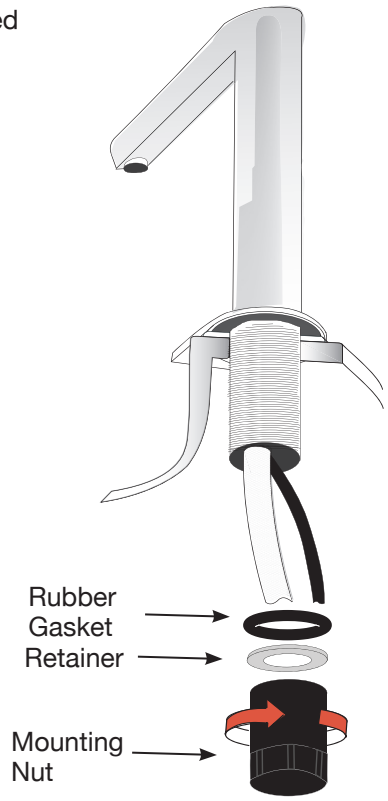


## 3C - SF-2900/2950 SERIES: INSTALL SLOTTED MOUNTING NUT

**A** Secure Faucet to the Wall by installing O-ring & Slotted Mounting Nut. Tighten nut securely. Do not overtighten.

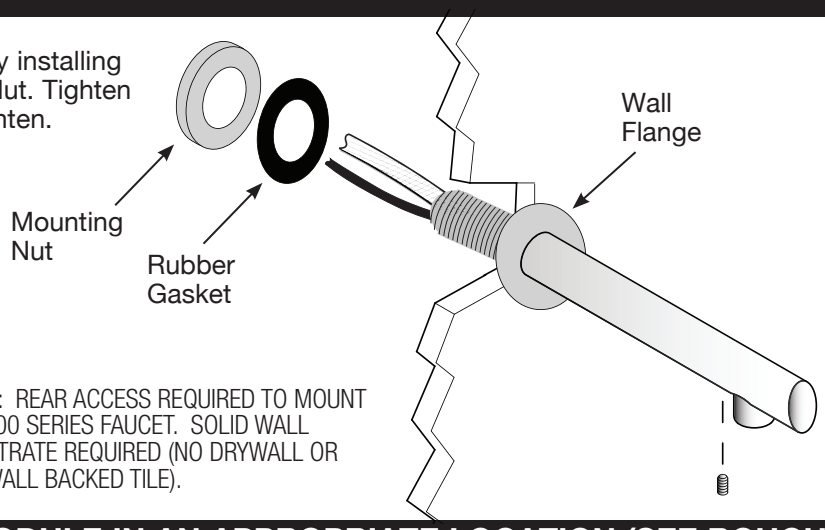


NOTE: REAR ACCESS REQUIRED TO MOUNT SF2800 SERIES FAUCET. SOLID WALL SUBSTRATE REQUIRED (NO DRYWALL OR DRYWALL BACKED TILE).

## 4 - INSTALL CONTROL MODULE IN AN APPROPRIATE LOCATION (SEE ROUGH-INS)

**A** Using Control Module as a template, mark mounting holes on wall. When installed, Sensor Cable and Flex Hose need some slack.

**B** Drill 1/4" (6 mm) hole at each mounting hole location.

**C** Install Plastic Anchors (supplied) into mounting holes in wall.

**D** Install Control Module to wall using Fasteners supplied.

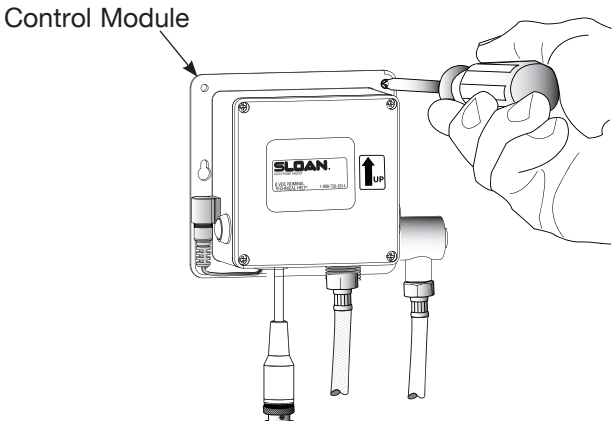

## 5 - CONNECT SENSOR CABLE AND WATER LINES TO CONTROL MODULE

A Connect Sensor Cable (from Faucet).

B Connect Flex Hose (from Faucet).

C Connect Water Line **(supplied with INTL Models only)** to Supply Stop and Control Module.

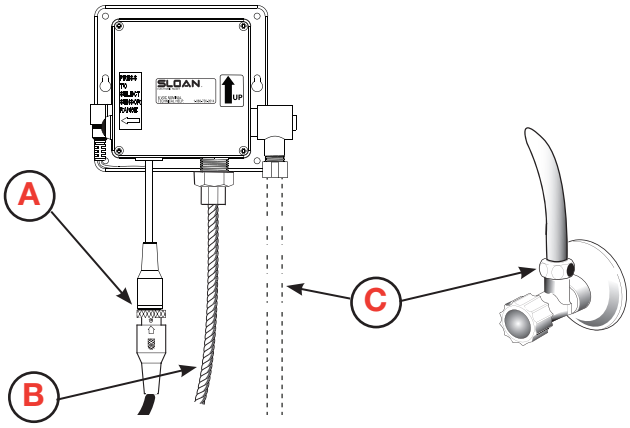


## 6 - INSTALL BATTERIES

A Loosen Cover Screws and remove Cover from Control Module.

B Remove Battery Compartment, remove compartment lid using screwdriver and install four (4) AA-size batteries (supplied) as indicated by the (+) and (—) symbols inside the Battery Compartment. Replace compartment lid, aligning the arrows to point at each-other, and tighten with a screw driver. (Do Not Over-Tighten)

C Reinstall Battery Compartment into the Control Module.

D Reinstall Control Module Cover using all four (4) Screws.

A

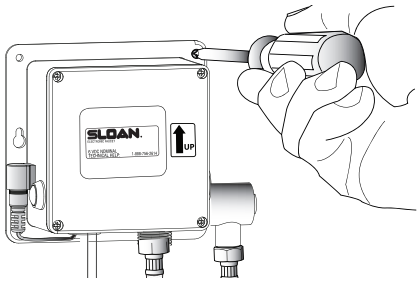


B

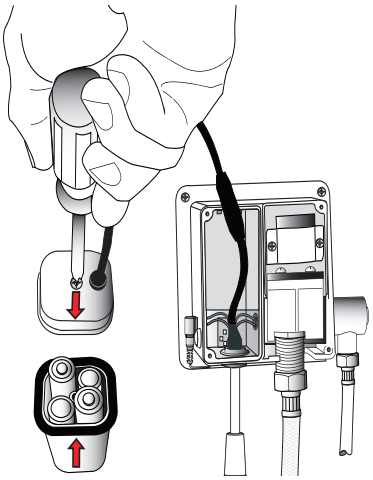

NOTE: Lithium or Alkaline batteries only. Do not use rechargeable batteries, rechargeable batteries do not have the high voltage threshold as Lithium or Alkaline batteries.

## 7A - CONNECT ADAPTER (ADAPTER POWERED MODELS ONLY) AND TURN ON WATER SUPPLY

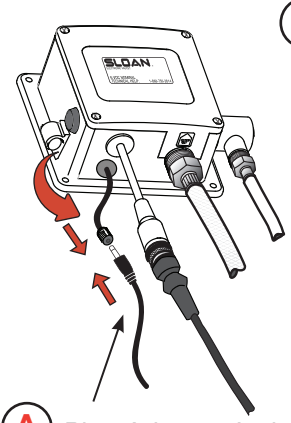


B Plug Adapter into Receptacle.

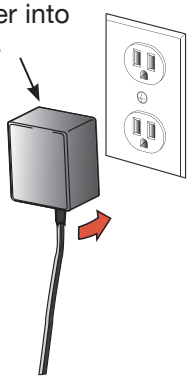

C Turn on Water Supply.

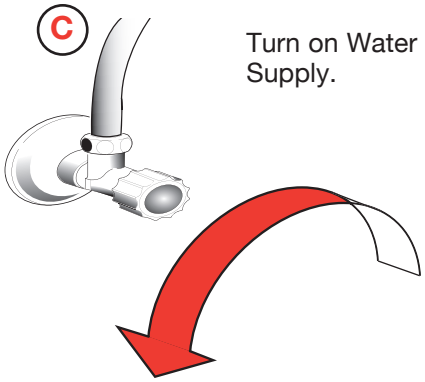

A Plug Adapter Jack into Control Module.

## 7B - GANG ADAPTER INSTALLATION

To connect multiple faucets to a single adapter, use the Sloan SFP-35-A Gang Adapter Kit (Purchase Separately). The SFP-35-A Gang Adapter Kit is supplied with cables to connect up to 6 faucets. To connect up to 8 faucets, purchase 2 additional SFP-38 Cable Splitters separately.

**A** Connect the Adapter and Cables to the Sensor Faucets as shown below.

For complete installation, refer to instructions packaged with Gang Adapter Kit.
www.sloan.com/sites/default/files/2015-12/0816817.pdf

**IMPORTANT!**
DO NOT PLUG IN THE ADAPTER UNTIL ALL CONNECTIONS ARE MADE

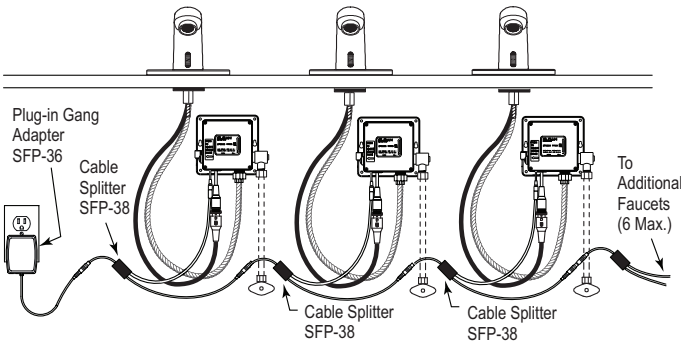


## 8 - SET RANGE ADJUSTMENT

**NOTE:** Sensor Range can be adjusted after power is supplied to the Faucet (battery or hardwire).

**A** Press the black button in until the sensor flashes (approximately 3 - 6 seconds).
As a visual or auditory cue, the water will turn on when pressed, and once it shuts off release the button

**B** Place your hand (or card) in front of the sensor at the distance you desire the Faucet to activate. Leave hand or card at this location while the sensor range is setting. Remove hand or card when the sensor light turns off. The sensor range is now set.

**NOTE:** The sensor range is dependent on the distance of your hand or card while the sensor is in range setting mode. If no target is placed in front of the sensor, the sensor range will set to its longest distance.

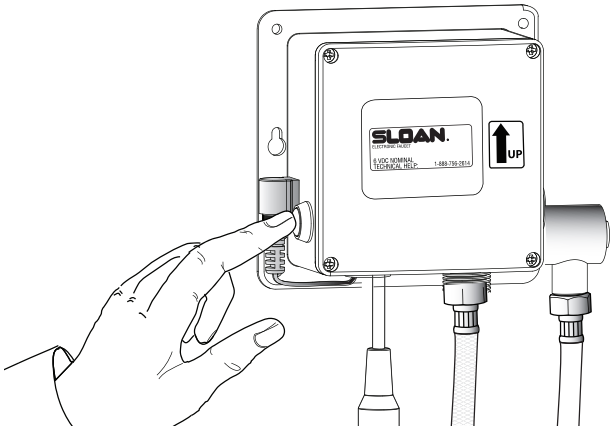


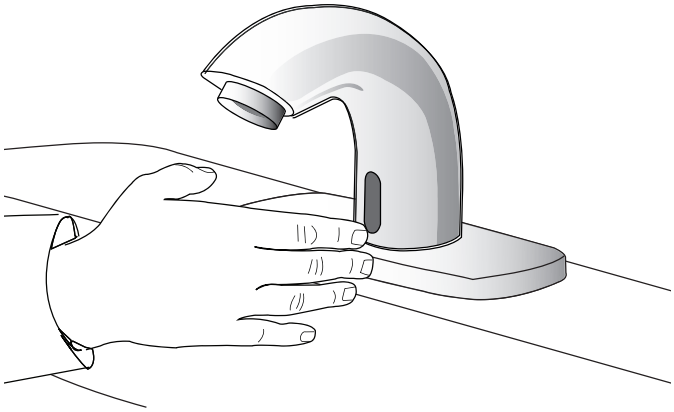

## 9 - SET WATER FLOW TIME-OUT (DECK MOUNTED FAUCETS ONLY)

**NOTE:** There are two available time-out settings; 10 seconds and 30 seconds.
From the factory, the time-out setting is 30 seconds. You can test the setting by pressing the button and releasing it. The faucet will run for the set time-out period before shutting off.

**A** Press the black button in for at least six seconds. The water flow time-out setting will change from 30 seconds to 10 seconds or from 10 seconds to 30 seconds.
When the LED stays illuminated, release button. Test faucet by pushing button and release it; and time water flow until it shuts off to verify 10 or 30 second time out. "Time Out" is maximum run time during target detection.

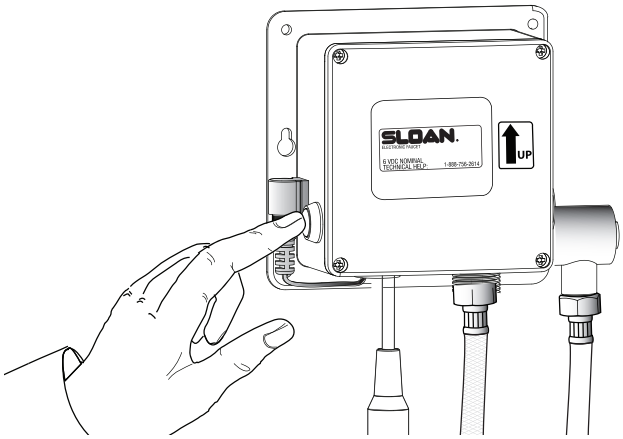

## 10 - TEST FAUCET OPERATION

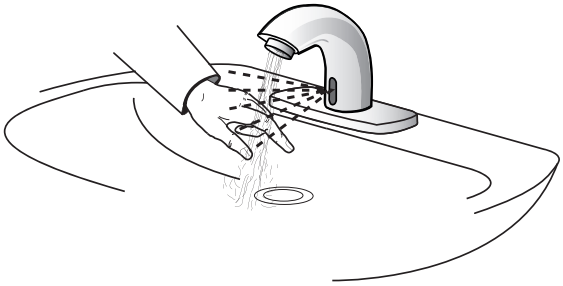

1. Place hands under faucet. Solenoid valve should "click," LED in sensor window should blink once and water should flow from the spout.

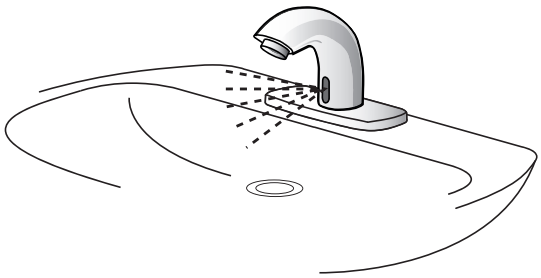

2. When hands are removed, the water flow should stop.

## CARE AND CLEANING OF CHROME

**DO NOT USE** abrasive or chemical cleaners (including chlorine bleach) to clean faucets that may dull the luster and attack the chrome or special decorative finishes. Use **ONLY** mild soap and water, then wipe dry with clean cloth or towel.

Do not spray cleaner directly onto faucet, spray into a clean cloth and wipe down, then wipe with dry towel.

While cleaning the bathroom tile, protect the faucet from any splattering of cleaner. Acids and cleaning fluids will discolor or remove chrome plating.

## TROUBLESHOOTING GUIDE

**1. Faucet does not deliver any water when Sensor is activated.**

**INDICATOR: Solenoid valve produces an audible "CLICK" & Red LED does blink.**

A.Water supply stop(s) closed. Open water supply stop(s).

B.Water strainer in control module is clogged. Close supply stops and remove water inlet line at control module. Remove, clean and reinstall strainer and water inlet line. Replace strainer if required.

**INDICATOR: Solenoid valve DOES NOT produce an audible "CLICK" and Red LED sensor does not blink.**

A.Sensor LED flashes 2 or more times: Low battery indicator, replace batteries (or check battery orientation) and retest.

B.No indicator on sensor

1. Deck Mounted Faucets: Press button on control box, if water starts running, press again to shut it off. Adjust sensor range, see section 8. If unit still does not detect target, replace sensor.
2. Deck Mounted Faucets: If water does not start running when button is pressed, check power supply and/or batteries. If power supply is good and no LED indicator on the sensor, replace sensor.
3. If a working faucet is next to a non-working faucet, swap the sensor of working faucet to non-working module to verify solenoid activation. If water flows, replace sensor on non-working faucet. If no water flows, replace module.

**2. Faucet delivers only a slow flow or dribble when Sensor is activated.**

A.Water supply stop(s) are partially closed. Completely open water supply stop(s).

B.Water strainer in control module is clogged. Close supply stops and remove water inlet line at control module. Remove, clean and reinstall strainer and water inlet line. Replace strainer if required.

C.Aerator is clogged. Remove, clean, and reinstall aerator. Replace aerator if required.

**3. Faucet does not stop delivering water or continues to drip after user is no longer detected.**

A.Valve is not sealing. Close supply stops and remove water inlet filter cap, remove filter, clean, reinstall/replace filter, and replace water inlet filter cap.

**4. The water temperature is too hot or too cold on a Faucet connected to hot and cold supply lines.**

A.Supply Stops are not adjusted properly. Adjust Supply Stops.

B. If adjustment of the stops does not correct the issue, then you will need to install either a mechanical or thermostatic mixer to better control the temperature of the water.

When assistance is required, please contact Sloan Valve Company Installation Engineering Department at:

**1-888-SLOAN-14: (1-888-756-2614)**

## PARTS LIST

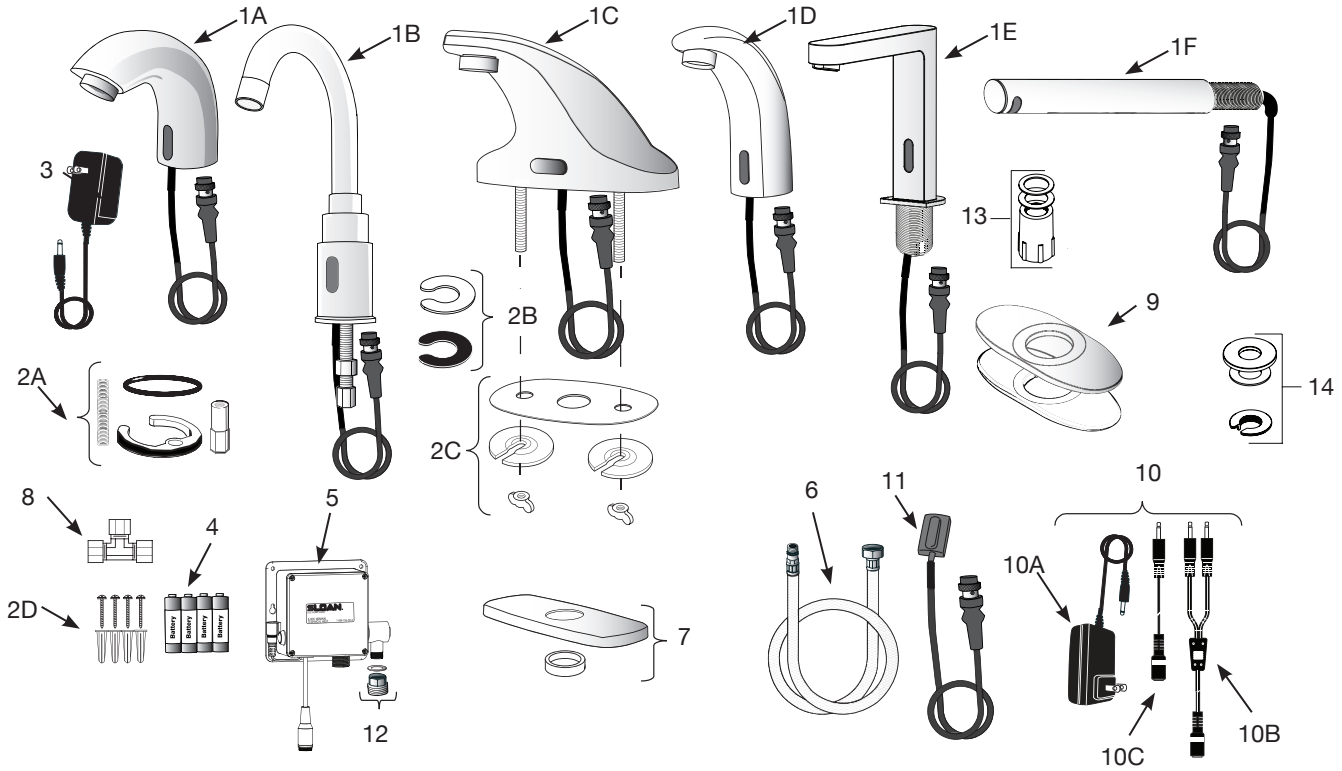


| Item No. | Part No. | Description |
|---|---|---|
| 1A | | SF-2100/SF-2150 |
| 1B | | SF-2200/SF-2250 |
| 1C | | SF-2300/SF-2350 |
| 1D | | SF-2400/SF-2450 |
| 1E | | SF-2900/SF-2950 |
| 1F | | SF-2800/SF-2850 |
| 2A | SFP-44A | Mounting Hardware Kit, (Models SF-2100/SF-2150 and SF-2400/SF-2450) |
| 2B | SFP-1004A | Mounting Hardware Kit, (Models SF-2200 SF-2250) includes Washer & Gasket |
| 2C | ETF-546A | Mounting Hardware Kit, (Models SF-2300 SF-235 includes Gasket, Washers & Wing Nuts |
| 2D | SFP-5 | Screws and Anchors for Control Module |
| 3 | SFP-6 | Plug-in Adapter (110 VAC/6 VDC) – (USA) |
| | SFP-20 | Plug-in Adapter Type G Rectangular (220 VAC/6 VDC) – (UK) |
| | SFP-25 | Plug-in Adapter Type C Round Pin (220 VAC/6 VDC) – (EUR) |
| | SFP-26 | Plug-in Adapter Type A Flat Blade (220 VAC/6 VDC) – (CH) |
| 4 | | batteries-AA size (4) included with #4 & #5 |
| 5 | SFP-40A | 6-Pin Control Module w/ range adjustment button (for use with SFP-41-A Sensor, #11) |
| 6 | SFP-10 | Flex Hose, Control Module to Spout |
| 7 | SFP-11 | 4" Trim Plate w/ Spacer (not supplied with most international models) |
| 8 | ETF-617A | 3/8" Bak-Chek® Tee Compression Fitting |
| 9 | | 4" Trim Plate w/Spacer |

### Accessories

| | | |
|---|---|---|
| 10 | SFP-35 | Gang Adapter Kit (100-240 VAC/ 6 VDC), includes: (1)10-A, (5)10-B and (1)10-C |
| 10A | SFP-36 | Plug-in Gang Adapter (100-240 VAC/ 6 VDC) |
| 10B | SFP-38 | Cable Splitter, 51"/1300 mm (5 included in kit) |
| 10C | SFP-37 | Cable Extension, 51"/1300 mm |

### Repair Parts

| | | |
|---|---|---|
| 11 | SFP-41A | Sensor (adjustable range - identified by a 6 pin connector) for use with SFP-40A, #5 (sensor lens Purple) |
| 12 | SFP-1003A | Hose inlet adapter kit for SFP-40-A, 3/8" comp female x 1/2-14 NPSM (International use) |
| 13 | 03800004 | Spout Mounting Kit SF-2900/2950 |
| 14 | 33620014 | Spout Mounting Kit SF-2800/2850 |

### Replacement Aerators & Spray Heads (not shown)

**SF-2100/2150, SF-2300/2350, SF-2400/2450:**
ETF-1039-A 0.35 GPM / 1.3 Lpm MLM Vandal resistant spray head
ETF-1023-A 0.5 GPM / 1.9 Lpm MLM Vandal resistant spray head
ETF688 - 1.5 GPM / 5.7 Lpm LAM Vandal Resistant Spray Head
ETF-1029-A 2.2 GPM / 8.3 Lpm LAM Vandal Resistant Spray Head

**SF-2200/2250:**
ETF-1038-A 0.35 GPM / 1.3 Lpm MLM Vandal resistant spray head
ETF-1021-A 0.5 GPM / 1.9 Lpm MLM Vandal resistant spray head
ETF-1041-A 1.0 GPM / 3.8 Lpm MLM Vandal resistant spray head
ETF-1028-A 1.5 GPM / 5.7 Lpm LAM Vandal Resistant Spray Head
ETF-1027-A 2.2 GPM / 8.3 Lpm LAM Vandal Resistant Spray Head
NOTE: For Non-VR Spray Heads, please consult factory for part numbers.

**SF-2800/2850**
33620012 0.35 gpm Aerator/33620011 0.5 gpm Aerator
**SF-2900/2950**
33620008 0.35 gpm Aerator/33620009 0.5 gpm Aerator

The information contained in this document is subject to change without notice.

**SLOAN VALVE COMPANY • 10500 SEYMOUR AVENUE • FRANKLIN PARK, IL 60131**
Phone: 1.800.982.5839 or 1.847.671.4300 • Fax: 1.800.447.8329 or 1.847.671.4380 • sloan.com
Copyright © 2022 SLOAN VALVE COMPANY
Code No: 0816496 – Rev. 6 (09/22)