RESTROOMDIRECT WWW.RESTROOMDIRECT.COM 704•937•2673 129 Oakpark Dr., Unit A, Mooresville, NC 28115

Installation & Maintenance

115V/60Hz Manual

Extractor Corporation
P.O. Box 99
685 Martin Drive
South Elgin, IL 60177
USA

SUITMATE®

TABLE OF CONTENTS

Introduction **3**
Important Installation Options **3**
Safety **3**
SUITMATE® Installation Instructions **4**
Wiring Diagram **7**
Testing and Operation **8**
Installation Troubleshooting **8**
SUITMATE® Exchange Procedure **9**
SUITMATE® Utilities Location Diagram **11**
SUITMATE® Maintenance Instructions **13**
SUITMATE® Troubleshooting **15**
Remove / Replace Mechanical Assemblies **17**
Remove SUITMATE® from the Wall Mount Bracket **17**
Reinstall SUITMATE® to the Wall Mount Bracket **18**
Top and Sub Top Assemblies **19**
Lid **23**
Riser Cable Assembly **25**
Drive Unit Assembly **27**
Liner **29**
Brake Rods, Basket, Hub, and Brake Disc Assembly **31**
Brake Disc and Basket **33**
Brake Lever **35**
Brake Pad **37**
Shock Mounts **39**
Shock Bumper Rings **41**
Motor from Mounting Plate **45**
Replace Electrical Assemblies **47**
GFCI **47**
Motor Capacitor **49**
Thermal Breaker **51**
Motor Switch **53**
Micro Switch **55**
Motor Timer **57**
SUITMATE® Micro Switch Adjustment Procedure **59**
SUITMATE® Exploded Drawing **60**
SUITMATE® Assemblies Chart **61**
SUITMATE® Parts and Assemblies List **62**
SUITMATE® Warranty **67**

INTRODUCTION

The SUITMATE® unit is a high-speed swimsuit water extractor. It is powered by a 1/3 horsepower, 115-V / 60-Hz full grounded and fault protected electric motor. The SUITMATE® unit weighs approximately 55 pounds (25kg).

This manual contains Installation Options, Safety Precautions, Installation Instructions, Wiring Diagram, Utilities Location Diagram, Maintenance Instructions, Troubleshooting Instructions detailing the removal / replacement of mechanical or electrical assemblies, Micro Switch Adjustment Procedures, plus an exploded drawing and a Parts List.

The SUITMATE® unit should only be worked on by a qualified mechanic-electrician, or maintenance individual.

All maintenance and troubleshooting procedures are located in the appropriate sections of this manual.

Follow the service procedures carefully. Always note the location and position of parts and wires before removing them so that reassembly can be done easily and correctly. If no specific reassembly instructions are given, simply reverse the disassembly procedure.

IMPORTANT INSTALLATION OPTIONS

Prior to installation of the SUITMATE® unit determine how the utilities will be connected.

1) Electrical and plumbing connected internally.

2) Internal electrical connection and external plumbing connection.

3) External electrical connection and internal plumbing connection.

4) External electrical and plumbing connection.

SAFETY

When servicing the SUITMATE® unit, observe the following safety precautions:

- Always turn off the power at the circuit breaker – place a lockout tag on the circuit breaker panel indicating that the breaker is not to be turned on except by authorized personnel and disconnect the unit before doing any work on the SUITMATE® unit. Simply turning off a switch is NOT enough.
- Use only proper tools, test equipment, and work practices when servicing the SUITMATE® unit. If there are any questions concerning proper tools, equipment or practices, please contact the factory for recommendations at: (Telephone) 800-553-3353, (Fax) 847-742-3552, or (E-Mail) info@suitmate.com.
- Due to critical tolerances, use only specified replacement parts. See the SUITMATE® UNIT PARTS AND ASSEMBLIES section of this manual.

INSTALLATION INSTRUCTIONS

115-V 20-Amp 60-Hz Self-Timed Unit

The SUITMATE® Swimsuit Water Extractor has been designed and manufactured with safety as our primary consideration. Therefore, it is important that the unit be installed correctly. It is also important that the installation comply with all local building codes and regulations. Please consult your local licensed plumbing and electrical engineers or contractors about your installation. Read the entire INSTALLATION instructions before beginning your installation. Remember: DO IT RIGHT and DO IT SAFE!

PROPER LOCATION FOR THE SUITMATE® UNIT

Following is a list of factors to consider in determining a location for the SUITMATE® unit.

1) The unit should be located in an area that is near where people remove and rinse out their swimsuits.
2) The unit should NOT be located in a cluttered area or where it is exposed to direct shower water or water hose down.
3) The unit should be mounted on a wall structure that will support the unit's approximate 55 pounds (25kg) hanging weight plus the added weight or pressure of people leaning on the unit. Consult the PROPER WALL MOUNTING section of these instructions to determine an appropriate location.
4) There should be a means to dispose of the wastewater from the unit. Consult the PROPER DRAINAGE section of these instructions (on page 6) to determine an appropriate location.
5) The unit should be wired to 115-V(AC), 20-Amp 60-Hz dedicated circuit. Consult the PROPER ELECTRICAL CONNECTIONS section of these instructions (on page 6) to determine proper location.

PROPER WALL MOUNTING OF THE SUITMATE® UNIT

The SUITMATE® unit should be mounted to the wall with the Wall Mount Bracket that is provided with the unit. The UTILITIES LOCATION DIAGRAM (page 11) shows the recommended location for the mounting holes, the electrical service, and the wastewater outlet (if utilized). The Wall Mount Bracket must be secured to a wall stud, or to concrete block or cinder block wall.

WARNING! ***Anchors in drywall are not sufficient to mount the SUITMATE® unit.***

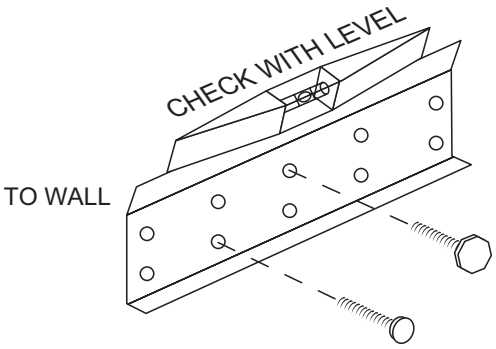

Locating and Securing the Wall Mount Bracket to the Wall

The suggested height from the floor to the top of the SUITMATE® unit is 42 inches (1050 cm). At least an additional 10 inches (250 cm) of clearance above the SUITMATE® unit is needed for the opening and closing of the lid. The upper center hole of the Wall Mount Bracket should be 38 +/- 1/16" (965 +/- 2mm) from the floor. The top of the Wall Sign should be 60 +/- 1/16" (965 +/- 2mm) above the floor and centered over the SUITMATE® unit. Determine a location on the wall that provides adequate clearance, a strong and secure place for the Wall Mount Bracket as well as easy access to electrical and drainage connections.

WARNING! ***The Wall Mount Bracket must be level after it is secured to the wall.***

To secure the Wall Mount Bracket, center the bracket at the desired location and mark the locations of the two center holes. Secure the Wall Mount Bracket at the center holes using fasteners appropriate to your conditions. All fasteners must be capable of supporting 55 pounds (25kg) in addition to the added weight or pressure of people leaning on the unit. Make certain the Wall Mount Bracket is level. Next secure the outer holes of the Wall Mount Bracket to the structure using fasteners appropriate to your conditions. After the bracket has been properly anchored to the wall and the electrical and drainage requirements have been allowed for, the SUITMATE® unit is ready to be mounted to the wall.

Mounting the SUITMATE® Unit to the Wall

Remove the SUITMATE® unit from its shipping box. Remove and discard the packaging material that is protecting the SUITMATE® unit. The upper back lip of the SUITMATE® unit should be lowered down and centered on the Wall Mount Bracket. After the unit is centered, push down on the back of the unit to make certain that it is securely wedged onto the bracket. Make certain the unit is level. If it is not level, remove the unit, adjust the Wall Mount Bracket and re-hang the unit. A level installation is necessary to minimize vibration and insure proper drainage of wastewater. Finish securing the unit to the wall using appropriate fasteners and anchors on the lower mounting channel at the bottom rear of the unit. This will prevent the unit from being lifted from the bracket or being moved.

Note: *Several holes in the lower mounting bracket may be obstructed by the GFCI Cover. Remove the GFCI cover to provide access to these holes.*

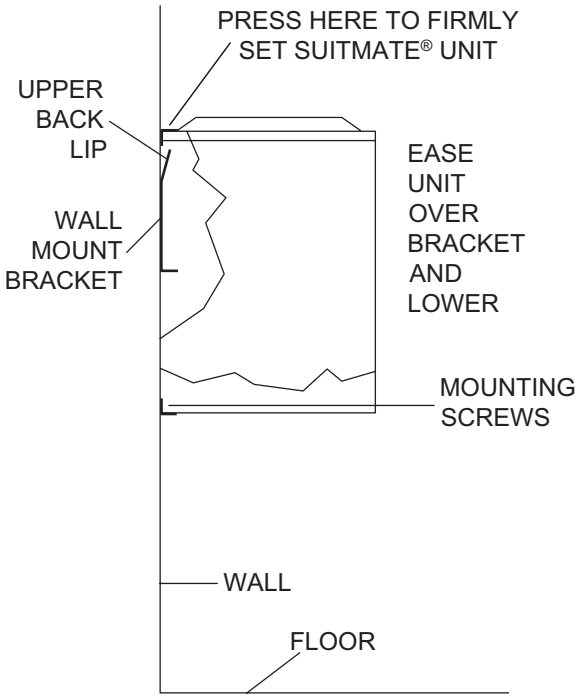

CUTAWAY VIEW OF SUITMATE® UNIT

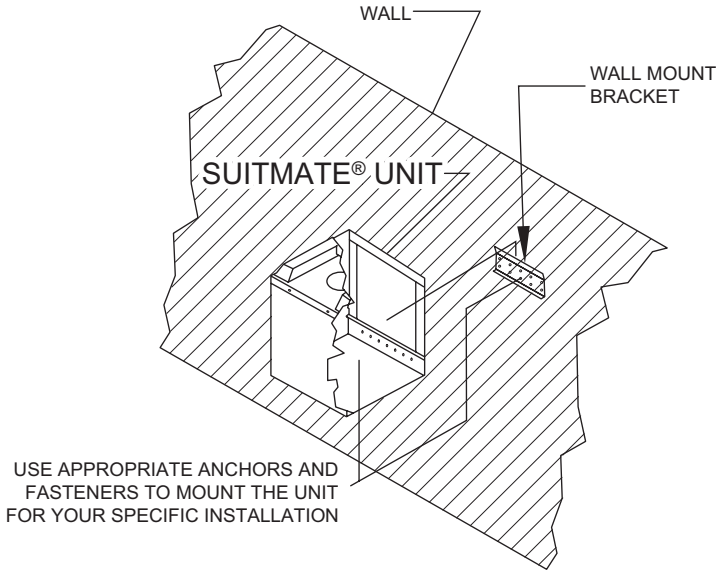

PROPER DRAINAGE FOR THE SUITMATE® UNIT

Note: *Strictly follow all applicable local plumbing codes and regulations.*

TO A FLOOR DRAIN

Drainage of the wastewater to a floor drain should be done ONLY in an area where the floor is normally wet. DO NOT drain water across a floor where people do not expect to encounter a wet and slippery condition. The SUITMATE® unit comes with a short flexible floor drain extension tube connected with a stainless steel hose clamp to its drain tailpiece.

WARNING!

The drain tube that comes with the unit must not be removed unless the unit is connected to an approved wastewater outlet or the factory-supplied tube is replaced with another tube according to the following instructions.

Replacing the Factory Drain Tube with a Longer Drain Tube

Use a 1-1/4 inch (31.25 mm) I.D. drain tube with a smooth interior that will not crimp or collapse. Use the stainless steel hose clamp that is provided with the factory flexible floor drain extension tube to secure the replacement tube to the unit's drain tailpiece. Route the drain tube so that it is never higher than the bottom of the SUITMATE® unit and always slopes down. Secure the drain tube to the wall or floor with properly sized "U" clamps so it cannot be maneuvered to trap wastewater. Cut off the end of the drain tube on an angle to help prevent it from being blocked by the floor, wall, or some other object. Upon completion of the installation, check to make certain that there is a free flow of water from the drain tube extension.

To an Approved Sanitary Waste Line

This installation should only be done in accordance with all applicable local plumbing codes and regulations. The unit's 1-1/4 inch (31.25 mm) O.D. drain tailpiece is designed for connection with standard compression type plumbing fittings. There is room inside the housing for the use of a standard "P" type plumbing connection. The waste outlet should be located in the wall behind the unit. The UTILITIES LOCATION DIAGRAM shows the appropriate location for the waste duct. Refer to UTILITIES LOCATION DIAGRAM on page 11.

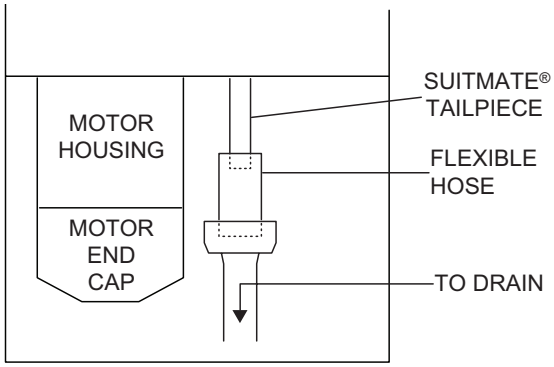

SUITMATE® UNIT HOUSING

If an open-site drain connection is required and the open site is to be positioned within the SUITMATE® unit housing, locate the top of the receiver pipe below the top of the Motor end cap, and locate the top outer edge of the receiver pipe at least 1-1/4 inches (31.25 mm) from the body of the Motor. (Also see the UTILITIES LOCATION DIAGRAM on page 11) Be certain that the cut off end of the drain extension tube is below the top of the receiver with the angle cut facing away from the Motor as illustrated.

PROPER ELECTRICAL CONNECTIONS FOR THE SUITMATE® UNIT

Note: *Strictly follow all applicable local electrical codes and regulations.*

The SUITMATE® unit is equipped with a ground fault circuit interrupter (GFCI), that is designed to be connected to a 115-V 20-Amp 60-Hz dedicated circuit that is protected by a fuse or circuit breaker of the correct (20 Amp Maximum) size. A PLUG-IN INSTALLATION IS NOT ACCEPTABLE! The utilized circuit must be run to the SUITMATE® unit's weatherproof Junction Box that contains the GFCI. A cable or liquid tight raceway such as Ultralight® Liquid Tight Flexible Conduit (or the equivalent) should be used from the circuit connection to the GFCI Junction Box. The UTILITIES LOCATION DIAGRAM (page 11) shows the location of the suggested area behind the unit for the entrance of the electrical raceway or cable that does not interfere with the drainage connection.

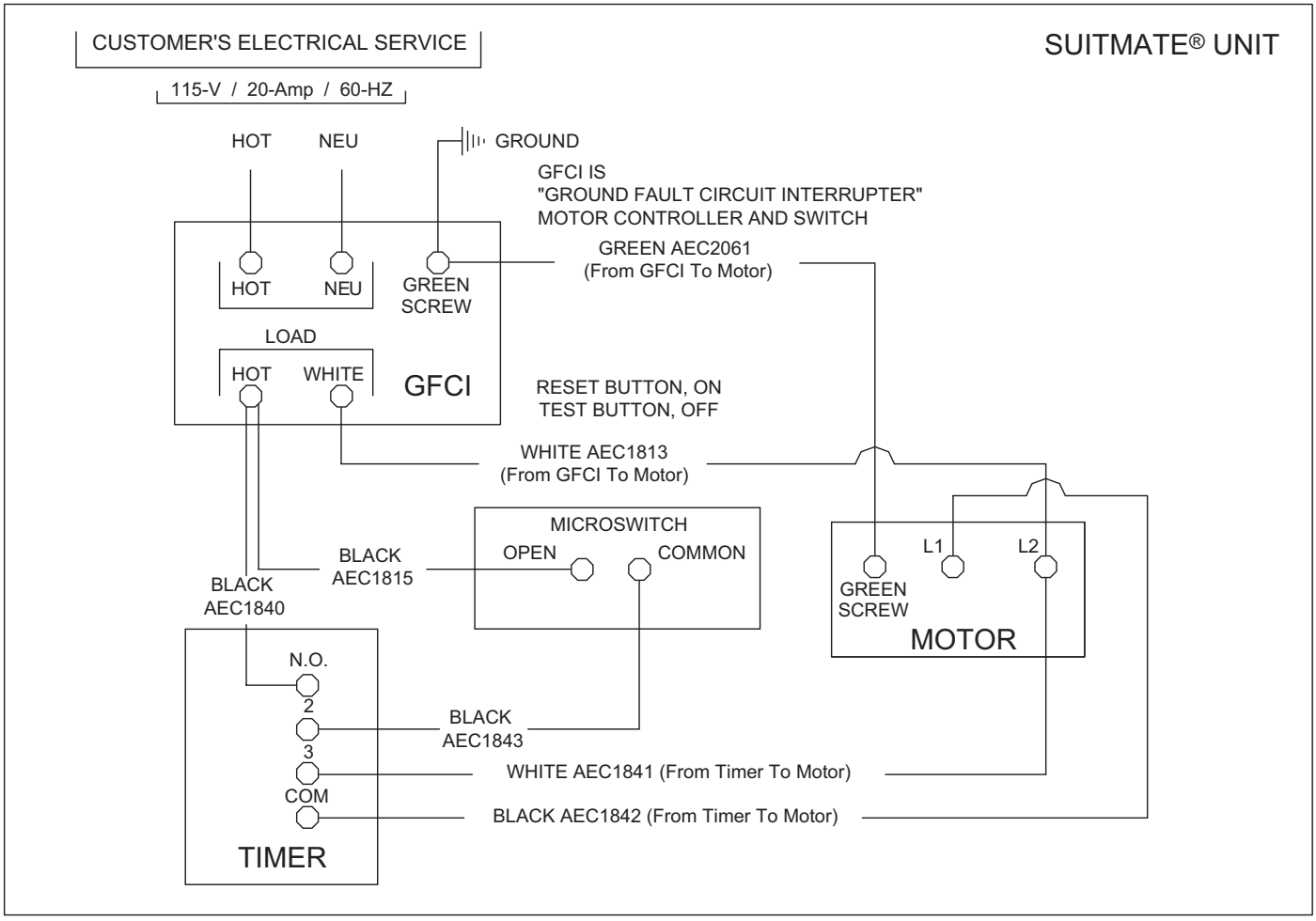

WARNING! ***Do not route the raceway where wastewater can flow or drip on it.***

Remove the cover of the weatherproof Junction Box, which contains the GFCI, and remove the GFCI mounting screws. The circuit ground conductor must be connected to the green grounding screw located on the GFCI. If no ground is available on the circuit utilized, you must provide a proper ground for the SUITMATE® unit. The hot and neutral leads of the power circuit should be connected to the GFCI screw terminals marked “LINE”. Connect the hot lead to the terminal marked “HOT” and the neutral lead to the terminal marked “NEUTRAL”. After the correct electrical connections have been properly made, remount the GFCI using the screws previously removed. Reinstall the weatherproof Junction Box cover previously removed. This cover provides access to the GFCI “TEST” and “RESET” buttons.

POSTING THE WALL SIGN

Locate the top edge of the sign 60+/- 1/16” (1524 +/- 2mm) above the floor centered over the SUITMATE® unit. At this height the sign will not be blocked when the lid is raised. It will also serve as a stop to keep the Lid from striking the wall behind the unit.

The sign has an adhesive foam backing. Be certain the surface that the sign is to be mounted to is clean and dry. Without touching the sign to the wall, align the top of the sign 60+/- 1/16” (1524 +/- 2mm) above the floor and at the center of the unit. Press the sign to the wall and rub firmly over the adhesive portion of the sign.

TESTING AND OPERATION

After the mounting and all connections are complete, test the SUITMATE® unit as follows:

1) Make certain all packaging material is removed from the unit including material around the Motor.
2) Check to see that the Basket is empty and that the Lid moves freely.
3) Press down on the Lid. The unit will start and run for 8 seconds. While the unit is running it should run smoothly and there should be no excessive vibration or noise.
4) Releasing the lid before the unit automatically stops causes the Basket to stop within one (1) second.
5) Test the SUITMATE® unit by putting a wet swimsuit in the unit according to the instructions on the underside of the Lid. If there is excessive vibration or noise it is usually caused by the improper loading of the swimsuit. Be certain that the swimsuit is pushed to the bottom of the Basket and that all material is at least two inches below the top of the Basket.

INSTALLATION TROUBLESHOOTING

If the SUITMATE® unit does not operate, check the following:

1) Check to see if there is power to the unit. Check the circuit using an A.C. voltmeter set to the appropriate range; measure across the “LINE” side of the GFCI.
2) Make certain that the GFCI switch is in the “ON” position.
3) Check the connections on the GFCI Junction Box. Be certain there is power on the “LOAD” side of the GFCI.
4) Check the SUITMATE® UNIT TROUBLESHOOTING section in this manual for additional troubleshooting assistance.

FINISHING THE INSTALLATION

Be certain to save this SUITMATE® UNIT MANUAL for future reference. If you have any concerns about the correct installation of the SUITMATE® unit, please contact Extractor Corporation at: (Telephone) 800-553-3353, (Fax) 847-742-3552, or (E-Mail) info@suitmate.com.

With proper installation, use, and maintenance your SUITMATE® Swimsuit Water Extractor will provide you with years of trouble-free service.

EXCHANGE PROCEDURE

115-V 20-Amp 60-Hz Self-Timed Unit

SUITMATE® EXCHANGE PROGRAM

The EXCHANGE PROCEDURE is to be used to effect the exchange of SUITMATE® units under the "SUITMATE® Exchange Program."

Note: *Retain ALL of the packaging material that the Exchange unit was delivered in.*

REMOVAL OF DEFECTIVE SUITMATE® UNIT

1) Shut off power to the SUITMATE® unit's circuit at the power panel – place a lockout tag on the circuit breaker panel indicating that the breaker is not to be turned on except by authorized personnel and disconnect the unit before doing any work on the SUITMATE® unit. Simply turning off a switch is NOT enough.
2) Remove the cover of the weatherproof Junction Box, which contains the GFCI; remove the GFCI mounting screws; disconnect the power feed wires from the GFCI terminals marked "LINE" and "NEUTRAL" and disconnect the ground wire. Refasten the GFCI to the unit. The Exchange unit contains a GFCI.
3) Disconnect the power feed liquid tight raceway from the Junction Box.
4) Loosen the drain tube hose clamp or the P-trap compression fittings and slide the drain tube or P-trap off the unit's tailpiece.
5) Remove the lower fasteners anchoring the unit to the wall.
6) Lift the unit up to remove it from the Mounting Bracket.

INSTALLATION OF THE EXCHANGE SUITMATE® UNIT

1) When taking the Exchange unit out of the carton, be careful not to damage the carton as it will be needed to return the defective unit.
2) Hang the Exchange unit on the Wall Mount Bracket by lowering the upper lip of the SUITMATE® unit case over the top edge of the bracket. Be certain that the Exchange unit is centered on the Wall Mount Bracket. Ease the SUITMATE® unit all the way down on the bracket and press down on both sides of the plastic top at the back of the unit so it is firmly set in place. Check that the unit is level. If it is not level, remove the unit, adjust the bracket, and re-hang the unit. A level installation is necessary to minimize vibration and ensure proper drainage of wastewater.
3) Securing the lower mounting channel to the wall by reinstalling the fasteners removed in step 5 above completes the mounting.
4) Reinstall the drain tube or P-Trap that was removed in step 4 above. Secure all wall connections.
5) Reconnect the power feed liquid tight raceway to the Junction Box, and the power leads and the ground wire that were disconnected above. Be certain the hot lead is connected to the GFCI terminal marked "HOT" and "LINE", and the neutral lead is connected to the GFCI terminal marked "NEUTRAL" and "LINE".
6) Secure the GFCI and your weatherproof Junction Box cover to the Junction Box.

WARNING!

For user safety it is imperative that the ground wire conductor be reconnected and the GFCI is operating properly. If no ground conductor was provided at the original installation, provide one now.

TESTING OF THE EXCHANGE UNIT

After the mounting and completion of all connections, test the SUITMATE® unit as follows:

1) Make certain all packaging material is removed from the unit including material around the Motor.

2) Turn on the power to the SUITMATE® unit's circuit at the power panel.

3) Check to see that the Basket is empty and that the Lid moves freely.

4) Press down on the Lid and hold it down for several seconds. The unit should run smoothly and there should be no excessive vibration or noise.

5) Release and lift the Lid from the down position. The Basket should stop rotating within one (1) second.

6) Test the SUITMATE® unit by putting a wet swimsuit in the unit according to the instructions on the underside of the Lid. If there is excessive vibration or noise it is usually caused by the improper loading of the swimsuit. Be certain that the swimsuit is pushed to the bottom of the Basket and that all material is at least two inches below the top of the Basket.

INSTALLATION TROUBLESHOOTING

If the SUITMATE® unit does not operate, check the following:

1) Make certain that there is power to the unit by using an A.C. voltmeter set to the appropriate range.

2) Depress the GFCI "RESET" button.

3) Check the connections in the GFCI Junction Box. Check if there is power on the "LOAD" side of the GFCI using an A.C. voltmeter set to the appropriate range.

4) Check the TROUBLESHOOTING section in this manual for additional troubleshooting assistance.

PACKAGING THE DEFECTIVE SUITMATE® UNIT FOR RETURN

1) Please use all packaging materials used with the Exchange unit.

2) Use the cardboard Motor sleeve and be certain it is properly installed around the Motor. Check that the Styrofoam Motor prop is in the cardboard sleeve and under the Motor.

3) Use the plastic corner sleeves and top and bottom corrugated/Styrofoam plates.

4) Place the Styrofoam Lid prop under the Lid.

5) Close and seal the carton with packaging tape.

6) Affix the prepaid UPS label to the carton and give the carton to UPS or call Extractor Corporation at 800-553-3353 for a pickup. For questions, please contact Extractor Corporation at: (Telephone) 800-553-3353, (Fax) 847-742-3552, or (E-Mail) info@suitmate.com.

We hope that the Exchange Program has worked satisfactorily for you and we would appreciate any comments or suggestions you might have to improve our service.

UTILITIES LOCATION DIAGRAM

115-V 20-Amp 60-Hz Self-Timed Unit

WARNING!

This diagram is for reference only! It is not to be used as the sole reference for installation of the SUITMATE® unit. The installation instructions beginning on page 4 must be followed explicitly!

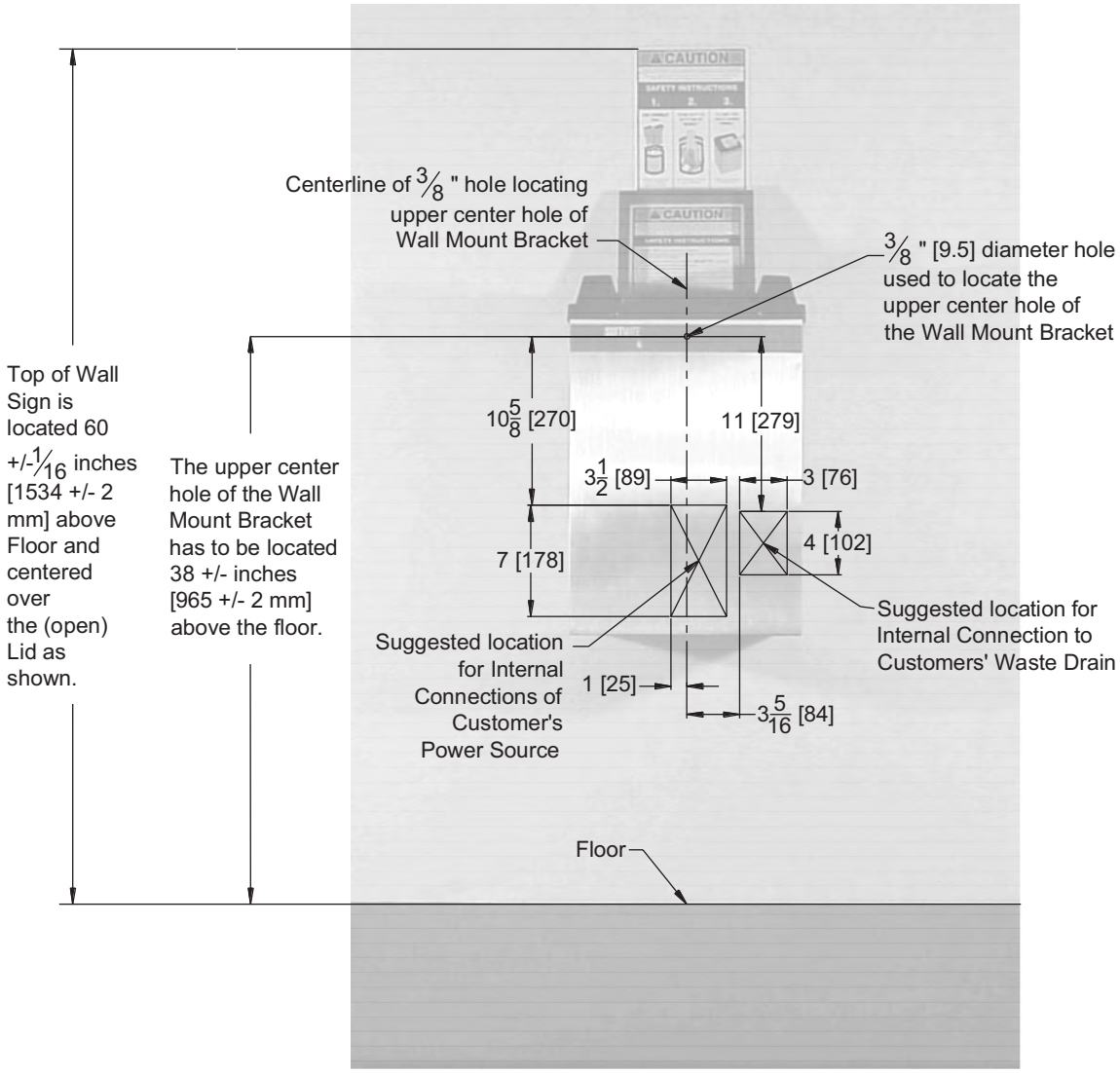

1) On wall locate center of 3/8” (9.5mm) hole for the upper center hole of the Wall Mount Bracket.
2) Draw a vertical line (down) from this mark to indicate the center of the lower mounting channel of the SUITMATE® unit.
3) Use given measurements to locate either or both locations for placement of internal utilities.
4) After the SUITMATE® unit is hooked over the upper bracket, move it side to side so the center hole in the bottom channel is over the vertical line drawn in Step 2.

MAINTENANCE SIGN OFF LOG

Weekly

Physical Inspection

Date	Performed By:	Date	Performed By:	Date	Performed By:	Date	Performed By:	Date	Performed By:

Hygenic Cleaning

Date	Performed By:	Date	Performed By:	Date	Performed By:	Date	Performed By:	Date	Performed By:

Flushing

Date	Performed By:	Date	Performed By:	Date	Performed By:	Date	Performed By:	Date	Performed By:

Monthly

Case and Top Care

Date	Performed By:	Date	Performed By:	Date	Performed By:	Date	Performed By:	Date	Performed By:

Testing the GFCI

Date	Performed By:	Date	Performed By:	Date	Performed By:	Date	Performed By:	Date	Performed By:

Reproduce and post copies of this page as required.

MAINTENANCE INSTRUCTIONS

115-V 20-Amp 60-Hz Self-Timed Unit

These recommendations are designed to keep your SUITMATE® unit clean and operating properly. Extractor Corporation recommends that these procedures be followed at the suggested frequencies.

TWICE DAILY

1) Hygienic Wipes

Use a disinfectant wipe, such as the PDI Sani-cloth® or Clorox® Disinfecting Wipes to wipe down the inside of the Basket, the Black Plastic Top, the Lid, and the sides of the unit.

DAILY

1) Inspection

a. Open the Lid, pull the Basket to the side and with a flashlight, check for trapped debris such a straps, strings, bathing caps, etc. inside of the unit. If foreign objects and/or debris are found, remove them with a long hook or other implement.

b. Should the Basket "flop" to one side during this inspection, you may have a broken shock mount in which you can contact Extractor Corporation at 800-553-3353 for further assistance.

c. Press down on the Lid and run the machine to ensure that it is operating properly. When you lift the Lid, the Basket should stop spinning within one (1) second.

2) Hygienic Cleaning

a. Mix a bleach-based disinfecting concentrate at the manufacturer's recommended strength in a ½ gallon bucket of water.

b. Clean the inside of the unit by spinning a small soft towel soaked in the cleaner. Repeat this step 3 times.

c. The spun towel can then be used to wipe down the Basket, the Black Plastic Top, the Lid, and the sides of the unit.

d. Re-wipe the surfaces (Basket, Black Plastic Top, Lid, and the exterior of the unit) with a fresh towel and clean water.

WARNING!

Never use flammable solvents in or on the SUITMATE® unit. When cleaning around the unit, be careful not to allow water to splash up under the unit as this may damage the motor.

3) Flushing

a. If your unit uses a drain house or a P-trap, disconnect it from the unit's drain tailpiece and inspect it for any obstructions.

b. With the drain hose or P-trap removed, place an empty bucket (1-2 gallons) under the tailpiece to catch the discharge from the flush.

c. Mix a disinfecting cleaner by referring back to steps A and B under Hygienic Cleaning.

d. SLOWLY pour the cleaner into the top opening of the unit. If the unit's drainage channels are open, the full amount of cleaner solution poured into the unit should flow into the bucket below within a few seconds. Check the discharge water for signs of debris.

e. Repeat step D using clean water until a free flow of water is established and the discharge water is clear of debris.

f. If you cannot establish a free flow of water or the discharge water is spilling out from under the unit, the tailpiece is plugged or the drain channels are blocked. Locate the blockage by referring back to step A under Inspection. After removing the blockage, repeat steps C through E.

g. Reinstall the drain hose or P-trap.

MONTHLY

1) Case and Top care

a. Wipe down the Black Plastic Top with Armor All® or its equivalent.

b. Clean and polish the stainless steel Case with Liquid Gold® or its equivalent. If flash rust or stains are present, use a Scotch Brite® pad or medium grade steel wool to remove them. Take care to rub stains out by going with the grain of the case (up and down – not sideways). Follow stain removal by polishing the Case with Liquid Gold® or its equivalent.

2) Testing the GFCI

a. Locate the weatherproof junction box in the bottom rear of the unit. Flip open the cover of the junction box to expose the “Test” and “Reset” buttons on the face of the GFCI.

b. Test the GFCI by depressing the “Test” button; the “Reset” button should pop out. Depress the “Reset” button to resume normal functioning. If the “Reset” button does not pop out during testing or is unable to be depressed back into place, the GFCI may be faulty; please contact Extractor Corporation at 800-553-3353 for further assistance.

If the unit does not operate, please refer to the Troubleshooting Guide. If you have any questions or problems, please contact Extractor Corporation at 800-553-3353.

TROUBLESHOOTING

115-V 20-Amp 60-Hz Self-Timed Unit

If you are having problems with your SUITMATE® unit please read through the numbered questions below to see if the condition you are experiencing is described and answered. If you still have difficulty, please contact the factory for recommendations at: (Telephone) 800-553-3353, (Fax) 847-742-3552, or (E-Mail) info@suitmate.com.

1) Is the unit dead? No sound, hum, etc., when the Lid is held down?

NO. Go to question 2.

YES. Is there power to the unit?

YES. Go to question 1.A.

NO. To make certain there is no power to the unit, use an A.C. voltmeter set to the appropriate range and measure across the “LINE” side of the GFCI.

1.A. Is the GFCI tripped out?

YES. Reset the GFCI by pressing the red button.

NO. Go to question 1.B.

1.B. Is the Micro Switch working?

Test the Micro Switch by slowly depressing the Lid and listening for a faint click.

YES. The Micro Switch may be faulty. Check the Micro Switch by using an A.C. voltmeter to make certain that power is getting to the motor.

NO. The Micro Switch may be out of adjustment. Consult the SUITMATE® MICROSWITCH ADJUSTMENT PROCEDURE in this manual.

2) Does the unit hum, but not operate, when the Lid is held down?

NO. Go to question 3.

YES. Does the basket spin freely? Test by depressing the Brake Rods manually and trying to spin the basket.

YES. There is some other problem with the unit and an Exchange may be recommended.

NO. Something may be obstructing the Basket. Pull the Basket to the side and, with a flashlight, look for an obstruction. Remove the obstruction.

3) Does the unit Leak?

NO. Go to question 4.

YES. There is probably an obstruction, of the drain hose or drain channel. Remove the drain hose and make certain it is not plugged. The drain channel is a two-inch U channel that runs around the perimeter of the interior of the unit. Check for an obstruction by pulling the Basket aside and, with a flashlight, look for something blocking the drain channel or hose. If foreign objects or debris are found, remove them with a coat hanger or other implement.

4) Does the unit operate intermittently?

NO. Go to question 5.

YES. Does the basket spin freely? Test by depressing the Brake Rods manually and trying to spin the Basket.

YES. The Motor Thermal Breaker may be faulty.

NO. There may be a partial obstruction of the Basket causing the Motor to overheat and the Motor Thermal Breaker to kick out. Check for an obstruction by pulling the Basket aside and, with a flashlight, look for something blocking the drain channel or hose. If foreign objects or debris are found, remove them with a coat hanger or other implement.

5) Does the GFCI keep tripping out?

NO. Go to question 6.

YES. Is the unit connected to a 115-V 20-Amp 60-Hz dedicated circuit?

NO. Provide a 115-V 20-Amp 60-Hz dedicated circuit.

YES. The GFCI may be faulty. Check the GFCI with a A.C. voltmeter set to the appropriate range, or by bypassing the GFCI. If the unit does not kick out the main dedicated circuit breaker when bypassing the GFCI, the GFCI is probably faulty and should be replaced.

6) Does the unit make excessive noise?

YES. The patrons may not be operating the unit properly. Test by putting a swimsuit in the Basket and pushing it all the way down, making certain that it is evenly distributed in the bottom. Operate the unit.

NO. If these questions have not led to a satisfactory answer to the problem with the SUITMATE® unit, please contact the Extractor Corporation at: (Telephone) 800-553-3353, (Fax) 847-742-3552, or (Email) info@suitmate.com.

MECHANICAL ASSEMBLIES

115-V 20-Amp 60-Hz Self-Timed Unit

Note: *Always turn off the power at the circuit breaker – place a lockout tag on the circuit breaker panel indicating that the breaker is not to be turned on except by authorized personnel – and disconnect the electrical connections before doing any work on the SUITMATE® unit. Simply turning off a switch is NOT enough. Use only proper tools, test equipment, and work practices when servicing the SUITMATE® unit.*

If there are questions concerning proper tools, equipment or practices, please call the factory for recommendations at: (Telephone) 800-553-3353, (Fax) 847-742-3552 or (Email) info@suitmate.com.

Due to critical tolerances, use only specified replacement parts. (See the individual sections in this manual.)

Some disassembly and assembly procedures have not been included, as the procedures seem to be self-evident.

REMOVE SUITMATE® UNIT FROM THE WALL MOUNT BRACKET

***Do This FIRST** prior to performing any electrical or mechanical maintenance.*

- Turn off the main electrical power to the unit – place a lockout tag on the circuit breaker panel indicating that the breaker is not to be turned on except by authorized personnel – and disconnect the unit before doing any work on the SUITMATE® unit. Simply turning off a switch is NOT enough.
- Consult the individual sections in this manual to determine the exact parts and fasteners that will be required for installation of mechanical components.

CAUTION! ***Make certain the main electrical power to the unit is turned off – and locked out – before beginning work on the SUITMATE® unit.***

EXTERNAL ELECTRICAL SERVICE

If the unit's electrical service is coming into the unit from outside the unit, it will be necessary to disconnect the incoming electrical service from the power source. Prior to disconnecting the electrical service make certain that the power source is turned off and locked out! Disconnect the incoming liquid tight raceway or cable from the power source.

EXTERNAL PLUMBING SERVICE

If the unit's plumbing service uses the factory supplied Drain Hose or is connected from outside the unit, it will be necessary to disconnect the drain hose or piping from its external hookup.

INTERNAL ELECTRICAL AND PLUMBING SERVICE

If the SUITMATE® unit was installed with internally connected plumbing and electrical connections:

1) Remove the cover of the weatherproof Junction Box that contains the GFCI; remove the GFCI; disconnect the external source ground wire and the power feed lines from the GFCI terminals marked "Line". Retain the weatherproof Junction Box cover and fasteners for reinstallation.
2) Disconnect the power feed liquid tight raceway or cable from the Junction Box and the internally connected drain hose.
3) Remove the lower fasteners anchoring the unit to the wall.
4) Remove the SUITMATE® unit from the Wall Mount Bracket by firmly grasping the sides of the Case bottom and gently lifting straight up until the unit clears the upper back lip of the Wall Mount Bracket. Take the SUITMATE® unit to a workbench.

REINSTALL THE SUITMATE® UNIT

CAUTION!

Make certain the main electrical power to the unit is turned off – and locked out – before beginning work on the SUITMATE® unit.

Return the SUITMATE® unit to its proper location and reconnect the unit by reversing the procedures outlined on page 17.

Note: *Make certain the unit is level. If it is not level, remove the unit, adjust the Wall Mount Bracket and re-hang the unit. A level installation is necessary to minimize vibration and insure proper drainage of wastewater.*

REMOVE THE TOP AND SUB-TOP ASSEMBLIES

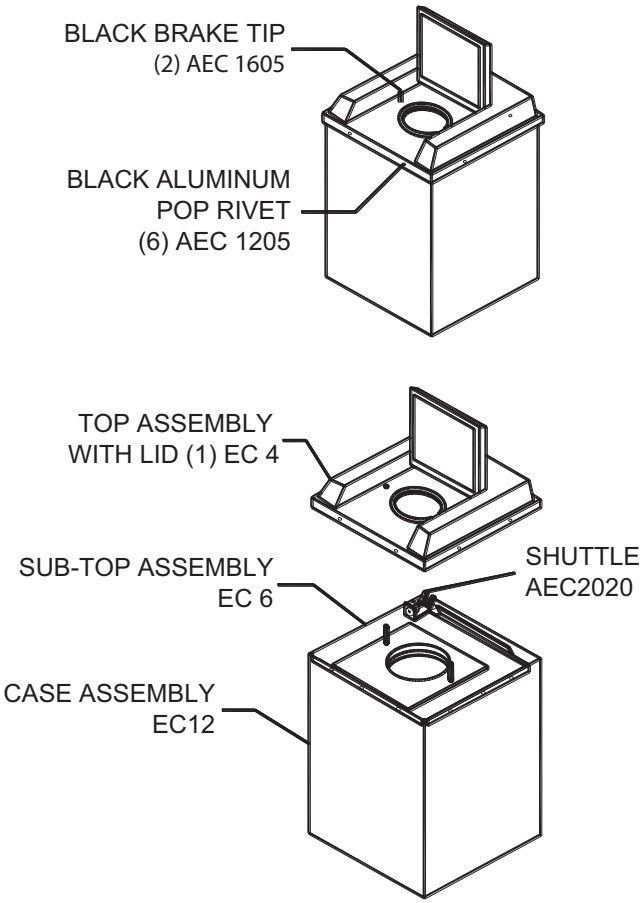

Do This FIRST

Make certain you have all the correct parts and fasteners necessary for correct installation. Re-use any components that are not damaged, otherwise replace them. Parts used in this process: (6) AEC1205 Black Aluminum Pop Rivets, (2) AEC1605 Black Rubber Brake Tips, (3) AEC1240 Aluminum Pop Rivets that are required to reinstall the Sub-Top.

REMOVE TOP ASSEMBLY

1) Remove the SUITMATE® unit from the Wall Mount Bracket following the instructions beginning on Page 17.
2) Place the SUITMATE® unit in an upright position.
3) Lift the Lid. Remove the Black Rubber Brake Tips from the (2) Brake Rods. If damaged, they must be replaced.
4) Remove the (6) rivets from around the outer edge of the Black Plastic Top.
    a. Punch out the center of each rivet with a small drift punch.
    b. Drill out each rivet.
    Note: *Make certain the drill bit does not reach a depth of more than ½-inch to avoid damaging the Black Plastic Liner.*
    c. Chisel off the rivet heads. Make certain the rivets are completely removed.
5) Separate the Black Plastic Top from the unit. Remove the Top by grasping the sides and lifting straight up while the lid is in the upright position.
6) Be careful not to bump the Riser Cable Assembly on the Sub-Top. Set the Top aside for reassembly.

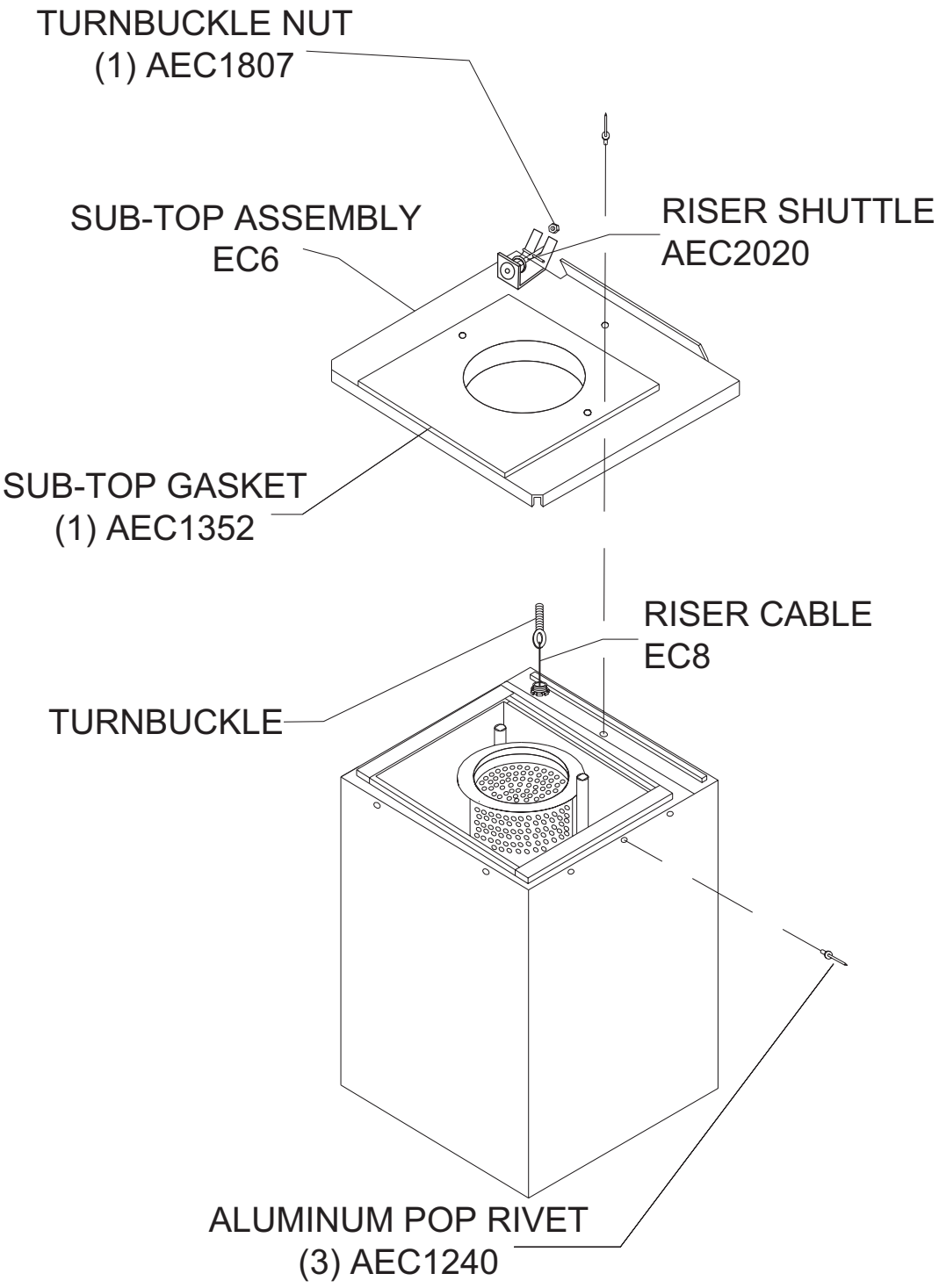
TURNBUCKLE NUT
(1) AEC1807
SUB-TOP ASSEMBLY
EC6
RISER SHUTTLE
AEC2020
SUB-TOP GASKET
(1) AEC1352
RISER CABLE
EC8
TURNBUCKLE
ALUMINUM POP RIVET
(3) AEC1240

REMOVE SUB-TOP ASSEMBLY

1) Remove the Nut from the Turnbuckle that is attached to the Riser Cable. Set the Nut aside for reassembly.
2) Pull the Riser Cable with Turnbuckle down through the hole in the Riser Shuttle.
3) Remove the (2) rivets from around the outer edge of the Sub-Top and the (1) rivet from the top.
    a. Punch out the center of each rivet with a small drift punch.
    b. Drill out each rivet.
    Note: *Make certain the drill bit does not reach a depth of more than ½-inch to avoid damaging the plastic liner.*
    c. Chisel off the rivet heads. Make certain the rivets are completely removed.
4) Separate the Sub-Top from the SUITMATE® unit. Remove the Sub-Top by grasping the sides and lifting straight up.
5) Remove rivet debris and any other foreign objects from the liner.

REPLACE SUB-TOP ASSEMBLY

1) Place the SUITMATE® unit in an upright position.
2) Locate the (2) Brake Rod holes in the Sub-Top gasket and align them with the Brake Rods.
3) Push the Sub-Top down over the Brake Rods.
4) Push the Riser Cable Turnbuckle up and through the hole in the Riser Shuttle.
5) Reattach the Nut (removed in step 1 above) to the Turnbuckle that is attached to the Riser Cable.
6) Align the (3) holes in the Sub-Top (one on each side and one on the top) with the respective holes in the Case.
    Note: *Make sure that the lip of the Sub-Top is outside the Case.*
7) Pop rivet the Sub-Top to the Case.

REPLACE TOP ASSEMBLY

1) Place the SUITMATE® unit in an upright position.
2) Lift the Lid on the Top Assembly and locate the (2) Brake Rod holes in the Top and align them with the Brake Rods. Push the Top down over the Brake Rods.
3) Align the (6) holes in the lower edge of the Top with the corresponding (6) holes in the Case.
4) Fasten the Top to the Case with (6) Pop Rivets.
5) Replace the (2) Black Rubber Brake Tips.
6) Reattach the SUITMATE® unit to the Wall Mount Bracket. See instructions beginning on Page 18.
7) Retest the SUITMATE® unit for proper operation, refer to TESTING AND OPERATION on page 8.
    Note: *Check the Micro Switch alignment by following the MICRO SWITCH ADJUSTMENT PROCEDURE section (Page 59) in this manual.*

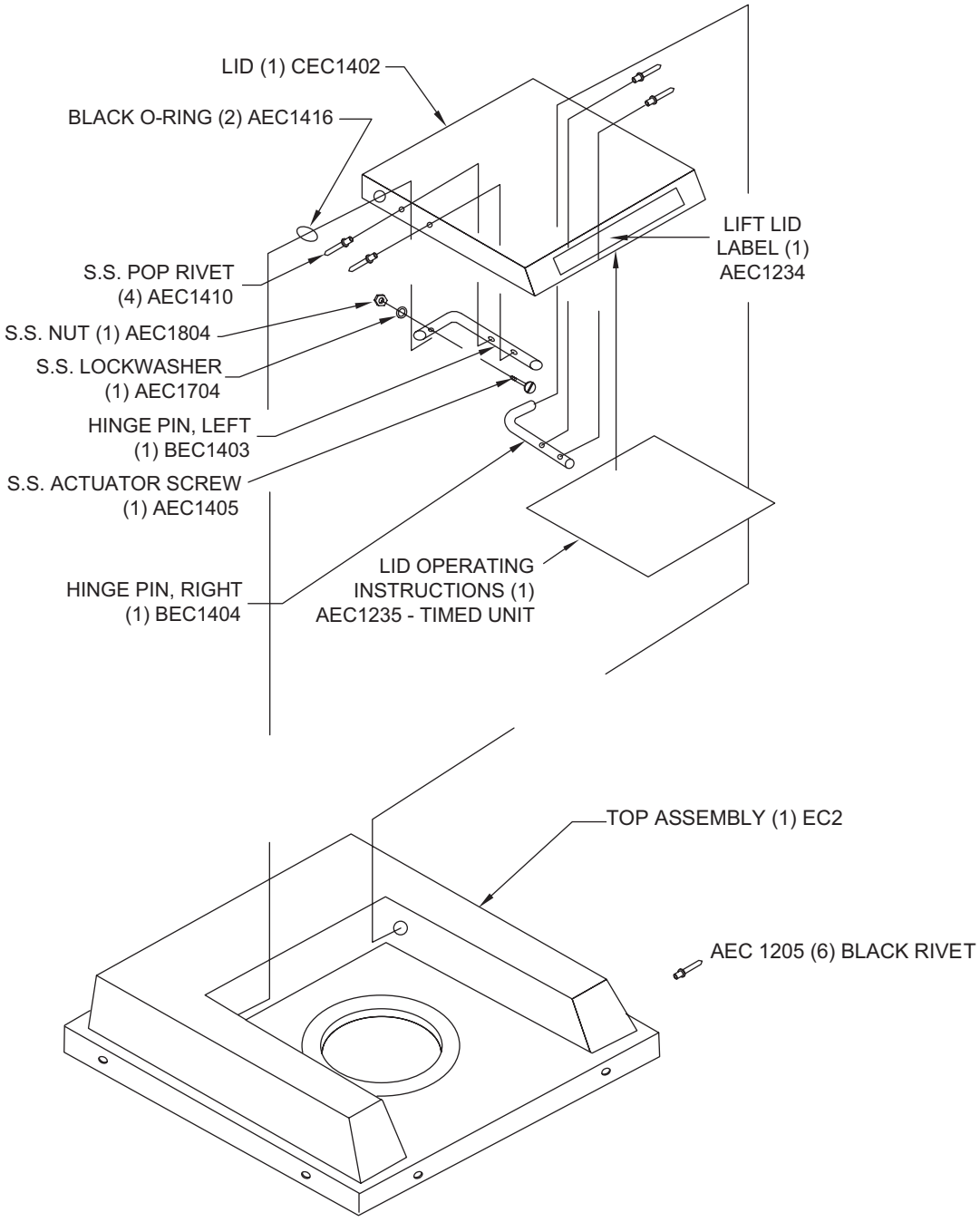
LID (1) CEC1402
BLACK O-RING (2) AEC1416
LIFT LID LABEL (1) AEC1234
S.S. POP RIVET (4) AEC1410
S.S. NUT (1) AEC1804
S.S. LOCKWASHER (1) AEC1704
HINGE PIN, LEFT (1) BEC1403
S.S. ACTUATOR SCREW (1) AEC1405
HINGE PIN, RIGHT (1) BEC1404
LID OPERATING INSTRUCTIONS (1) AEC1235 - TIMED UNIT
TOP ASSEMBLY (1) EC2
AEC 1205 (6) BLACK RIVET

REMOVE LID FROM BLACK PLASTIC TOP

Do This FIRST

Make certain you have all the correct parts and fasteners necessary for correct installation. Re-use any components that are not damaged, otherwise replace them. Parts used in this process: (2) AEC1410 S.S. Pop Rivets, (2) AEC1416 Black O-Rings, (1) AEC1704 S.S. Lock Washer, (1) BEC1403 Hinge Pin, Left, (1) AEC1405 Actuator Screw, (1) BEC1404 Hinge Pin, Right, and (1) AEC 1804 S.S. Nut. Plus any components required to reinstall the Sub Top and Top Assemblies (Page 19).

REMOVE LID

1) Remove SUITMATE® unit from the Wall Mount Bracket. See instructions beginning on Page 17.
2) Remove Top and Sub-Top Assemblies. See instructions beginning on Page 19.
3) Place the Top Assembly upside down.
4) Remove the Nut and Lock Washer from the Actuator Screw.
5) Unscrew the Actuator Screw from the Left Hinge Pin.
6) Remove the (2) rivets from the outer edge of the S.S. Lid that holds the Left Hinge Pin.
    a. Punch out the center of each rivet with a small drift pin.
    b. Drill out each rivet.
    c. Chisel off the rivet heads. Make certain the rivets are completely removed.
7) Remove the hinge pin through the metal Lid. Set the Left Hinge Pin aside for reassembly later.
8) Remove the Lid from the Top Assembly.

Note: *A rubber O-ring is located on each hinge between the metal Lid and the plastic Top.*

REPLACE LID

1) Insert the Right Hinge Pin into the Top and then insert the Left Hinge Pin through the Lid and into the Top.

Note: *Make certain that you have reinstalled the Rubber O-Ring on both hinge pins.*

2) Rivet the Left Hinge Pin to the Lid.
3) Screw in the new Actuator Screw and fasten with Lock Washer and Nut. (See illustration.)

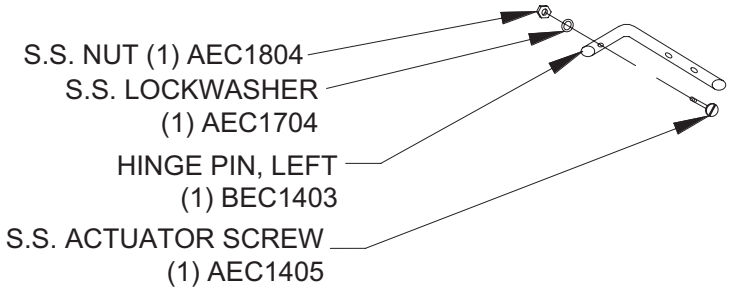

Note: *Make certain that with the lid open, the Actuator Screw does not touch the inside of the black plastic top.*

4) Reinstall the Sub-Top and Top assemblies. See instructions beginning on Page 21.
5) Reattach the SUITMATE® unit to the Wall Mount Bracket. See instructions beginning on Page 18.
6) Retest the SUITMATE® unit for proper operation, refer to TESTING AND OPERATION on page 8.

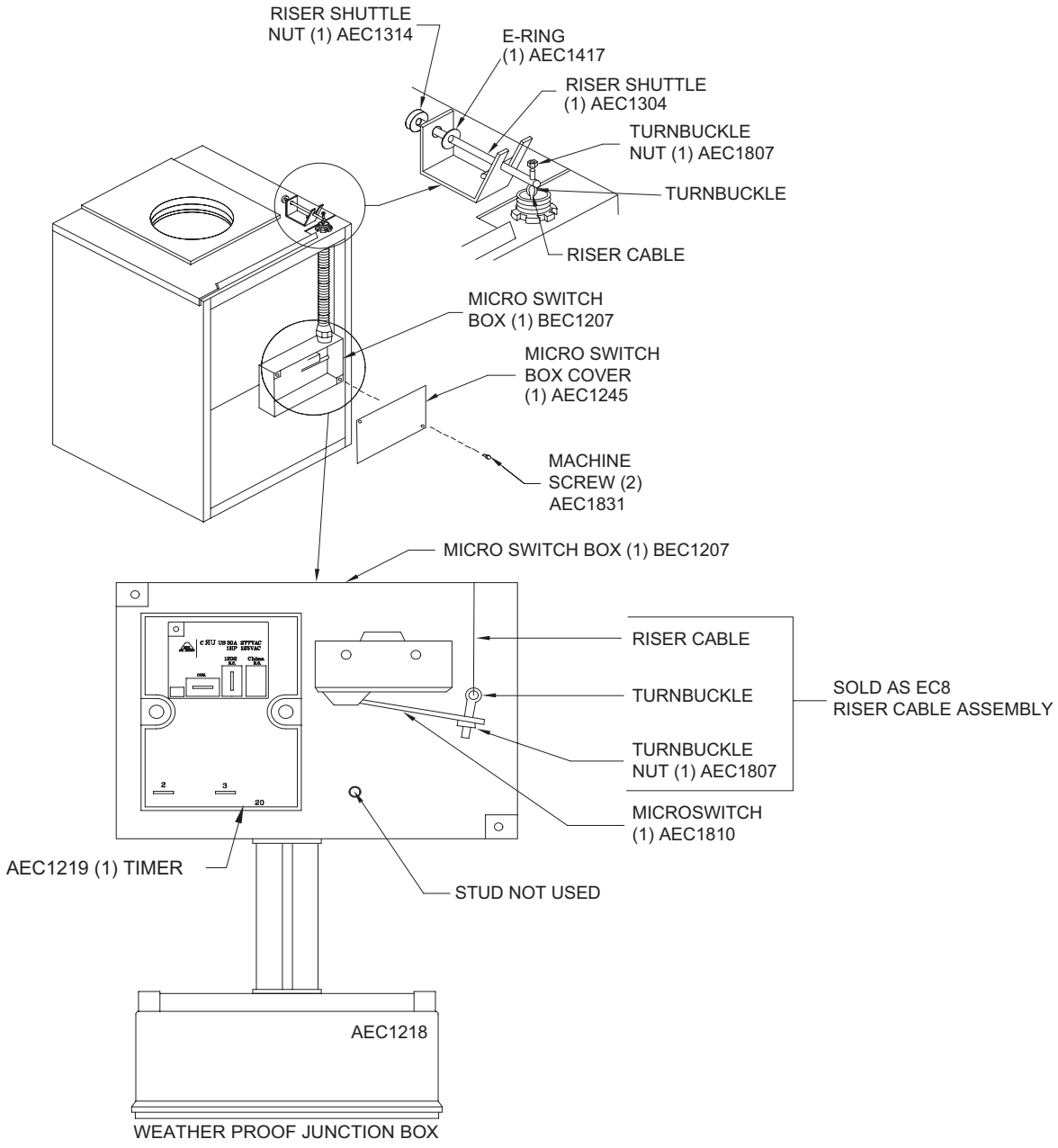
RISER SHUTTLE NUT (1) AEC1314
E-RING (1) AEC1417
RISER SHUTTLE (1) AEC1304
TURNBUCKLE NUT (1) AEC1807
TURNBUCKLE
RISER CABLE
MICRO SWITCH BOX (1) BEC1207
MICRO SWITCH BOX COVER (1) AEC1245
MACHINE SCREW (2) AEC1831
MICRO SWITCH BOX (1) BEC1207
RISER CABLE
TURNBUCKLE
TURNBUCKLE NUT (1) AEC1807
SOLD AS EC8 RISER CABLE ASSEMBLY
MICROSWITCH (1) AEC1810
AEC1219 (1) TIMER
STUD NOT USED
AEC1218
WEATHER PROOF JUNCTION BOX

REMOVE RISER CABLE ASSEMBLY

Do this FIRST

Make certain you have all the correct parts and fasteners necessary for correct installation. Re-use any components that are not damaged, otherwise replace them. Parts used in this process: (2) AEC1807 Turnbuckle Nut, (1) EC8 Riser Cable Assembly, (2) AEC1831 Machine Screw, (1) AEC1245 Micro Switch Box Cover. Plus any components required to reinstall the Sub-Top and Top Assemblies (Page 19).

REMOVE RISER CABLE ASSEMBLY

1) Remove SUITMATE® unit from the Wall Mount Bracket. See instructions beginning on Page 17.
2) Remove Top and Sub-Top Assemblies. See instructions beginning on Page 19.
3) Place the SUITMATE® unit in an upright position with the back of the unit facing out.
4) Remove the Micro Switch Box Cover. The cover is held on with (2) Machine Screws. Remove the cover and screws and set aside for reassembly.
5) Remove the Turnbuckle Nut from the Turnbuckle.
6) Pull the Turnbuckle up and out of the hole in the Micro Switch arm.
7) Remove the Riser Cable by pulling it up through the conduit connector at the top of the unit.

REPLACE RISER CABLE ASSEMBLY

1) Reinstall Sub-Top Assembly after cleaning out any debris before starting with the Riser Cable replacement.
2) Drop the new Riser Cable (with Turnbuckle) down through the conduit to the Micro Switch.
3) Insert the Turnbuckle through the hole in the Micro Switch arm. Replace the Nut (saved from step 5 above) on the Turnbuckle.
4) Insert the Turnbuckle on the new Riser Cable through the hole in the Riser Shuttle. Replace the Turnbuckle Nut.
5) Replace Top Assembly. See instructions beginning on Page 21.
6) Push the Lid down. The Micro Switch should NOT activate (click) until the Lid is approximately ¼-inch from being totally depressed. Adjust the alignment by tightening (clockwise – will activate unit sooner) or loosening (counter-clockwise – will activate unit later) the Turnbuckle Nut on the bottom of the Riser Cable until the proper adjustment is obtained. Do not bend the Micro Switch arm. For additional information refer to the MICRO SWITCH ADJUSTMENT PROCEDURE (on Page 59) section in this manual.
7) Provide power to the unit to make certain it is functioning properly, test it.
8) Disconnect power to the unit.
9) Replace the Micro Switch Box Cover securing it with the (2) Machine Screws removed in step 4 above.
10) Reinstall the SUITMATE® unit to the Wall Mount Bracket. See instructions beginning on Page 18.
11) Retest the SUITMATE® unit for proper operation, refer to TESTING AND OPERATION on Page 8.

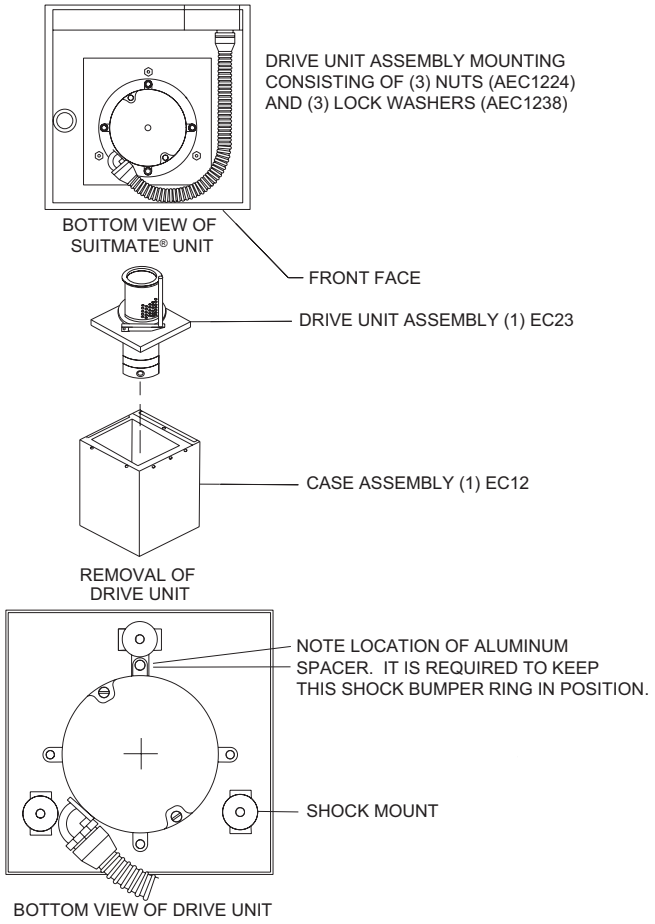

Photograph shows the Correct Position of Wires for Rewiring the Motor

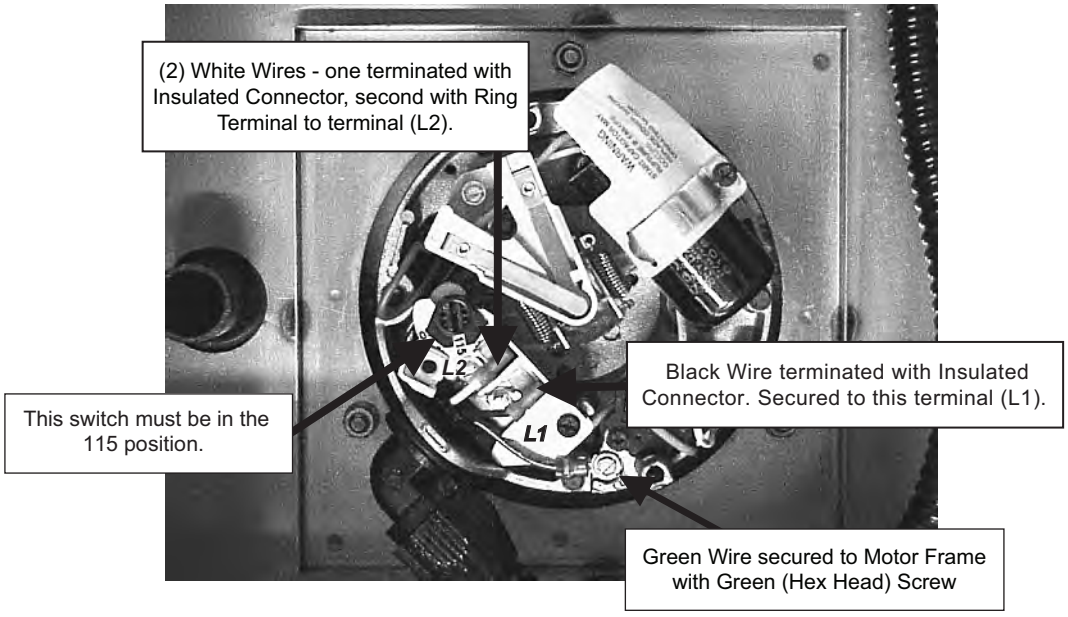

REMOVE DRIVE UNIT ASSEMBLY FROM CASE

Do this FIRST

Make certain you have all the correct parts and fasteners necessary for correct installation. Re-use any components that are not damaged, otherwise replace them. Parts used in this process: (3) AEC1224 Nuts, (3) AEC1238 Lock Washers, (2) AEC1819 Flange Fork Connectors, (2) AEC1830 Insulated Connectors, (1) AEC1813 White Wire, (1) AEC1842 Black Wire, (1) AEC1841 White Wire, and (1) AEC1813 Green Wire. Plus any components required to correctly reinstall the Sub-Top and Top Assemblies (Page 19).

REMOVE DRIVE UNIT ASSEMBLY

1) Remove SUITMATE® unit from the Wall Mount Bracket. See instructions beginning on Page 17.
2) Remove Top and Sub-Top Assemblies. See instructions beginning on Page 19.
3) Place the SUITMATE® on its face to expose the bottom of the unit.
4) Unscrew the (2) captive screws that secure the Motor end cap from the bottom of the Motor.
5) Remove the end cap with captive screws and set it aside for reassembly.
6) Remove the Micro Switch Box Cover. The cover is held on with (2) Machine Screws. Remove cover and screws and set aside for reassembly.
7. Disconnect the (4) wires connecting the motor to the unit by disconnecting the wires from the L1 and L2 terminals on the Motor. Loosen the Green Grounding screw and disconnect the green ground wire.
8) Cut off the (4) wire connectors from the wires to allow the wires to be pulled through the 90° conduit connector.
9) Pull the wires through the 90° conduit connector by pulling them from the Micro Switch Box about 2 to 3 inches.
10) Remove the 90° conduit connector from the Motor by disconnecting the plastic cable conduit from the 90° conduit connector and unscrewing the 90° conduit connector from the Motor.
11) Return the SUITMATE® unit to its upright position.
12) Remove the three sets of Nuts and Lock Washers that hold the Drive Unit to the Case. Set them aside for reassembly.
13) From the top of the SUITMATE® unit, grasp the sides of the Basket. Remove the Drive Unit by lifting the Drive Unit up at a slight angle.

    Note: Be careful not to damage the Black Plastic Liner. If the Liner is damaged, it must be replaced.

REPLACE DRIVE UNIT ASSEMBLY

1) Align the (3) Shock Mounts on the Drive Unit with the (3) holes in the Case and lower the Drive Unit into the Case making certain that the (3) Shock Mounts are in the appropriate holes in the Case, so that the 90° connector will be in the correct position. See the Bottom View diagram of the SUITMATE® unit on Page 26.

   Note: *Be careful not to damage the Black Plastic Liner. If the Liner is damaged, it must be replaced.*
2) Replace the (3) sets of Nuts and Lock Washers on the Shock Mount threaded inserts that protrude through the Case.
3) Replace the 90° conduit connector by screwing it into the Motor.

   Note: *Be careful not to cross thread the threads on the 90° conduit connector.*
4) Reconnect the plastic cable conduit to the 90° conduit connector.
5) Push the (4) wires from the Micro Switch Box up into the Motor.
6) Strip the (4) wires enough to install the NEW appropriate wire connectors on the wires.
7) Reattach the (4) wire connectors to the appropriate terminals in the Motor: Green Wire to green screw, (2) White Wires to terminal L2 (one Flag and one Fork), and Black Wire to terminal L1.
8) Reinstall the Motor end cap with the (2) captive screws removed in step 5 above.
9) Reinstall the Sub-Top and Top Assemblies. See instructions beginning on Page 19.
10) Reinstall the SUITMATE® unit to the Wall Mount Bracket. See instructions beginning on Page 18.
11) Retest the SUITMATE® unit for proper operation, refer to TESTING AND OPERATION on Page 8.

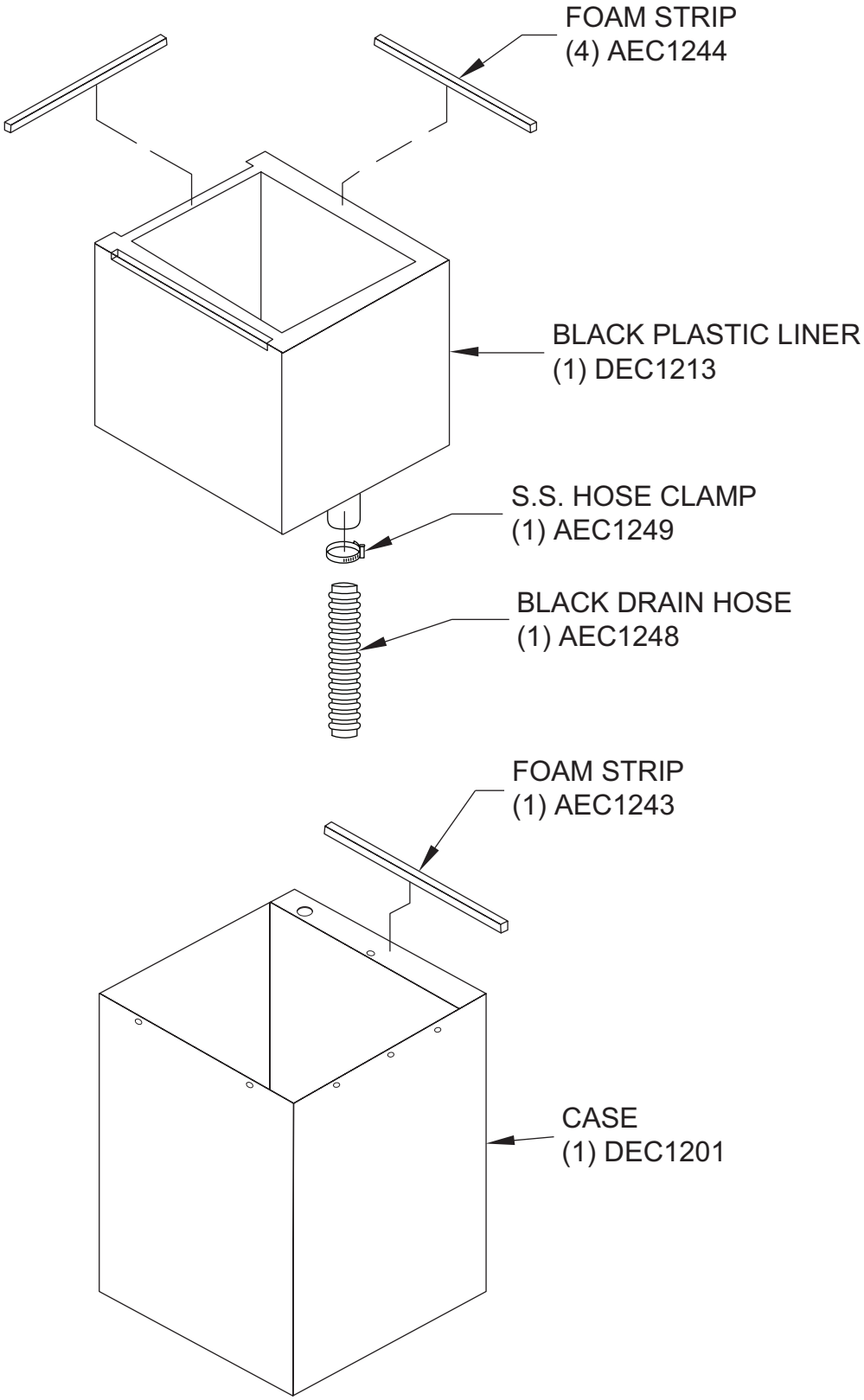
FOAM STRIP
(4) AEC1244
BLACK PLASTIC LINER
(1) DEC1213
S.S. HOSE CLAMP
(1) AEC1249
BLACK DRAIN HOSE
(1) AEC1248
FOAM STRIP
(1) AEC1243
CASE
(1) DEC1201

REMOVE / REPLACE BLACK PLASTIC LINER FROM CASE

Do this FIRST

Make certain you have all the correct parts and fasteners necessary for correct installation. Re-use any components that are not damaged, otherwise replace them. Parts used in this process: (4) AEC1244 Foam Strips, (1) DEC1213 Black Plastic Liner, (1) AEC1249 S.S. Hose Clamp, (1) AEC1248 Black Drain Hose, and (1) AEC1243 Foam Strip. Plus any components required to properly reinstall the Drive Unit Assembly (Page 27) and the Sub-Top and Top Assemblies (Page 19).

REMOVE LINER

1) Remove SUITMATE® unit from the Wall Mount Bracket. See instructions beginning on Page 17.
2) Remove Top and Sub-Top Assemblies. See instructions beginning on Page 19.
3) Remove Drive Unit Assembly. See instructions beginning on Page 27.
4) Place the SUITMATE® unit on its face to expose the bottom of the unit.
5) If the factory supplied drain hose was used, unscrew the hose clamp that holds the plastic drain tube to the Liner drain hose outlet.
6) Remove the drain hose and set it aside for reassembly.
7) Place the SUITMATE® unit in an upright position.
8) From the top of the SUITMATE® unit, grasp the lip of the Black Plastic Liner and pull straight up. Be careful not to damage the Liner. If the Liner is damaged, it must be replaced.

REPLACE LINER

1) Place the Liner into the case using care not to damage it.
2) If the factory supplied drain hose was used, reinstall it using the hose clamp removed in step 5 above.
3) Reinstall the Drive Unit. See instructions beginning on Page 27.
4) Reinstall the Sub-Top and Top Assemblies. See instruction beginning on Page 21.
5) Reinstall SUITMATE® unit to the Wall Mount Bracket. See instructions beginning on Page 18.
6) Retest the SUITMATE® unit proper operation, refer to TESTING AND OPERATION on Page 8.

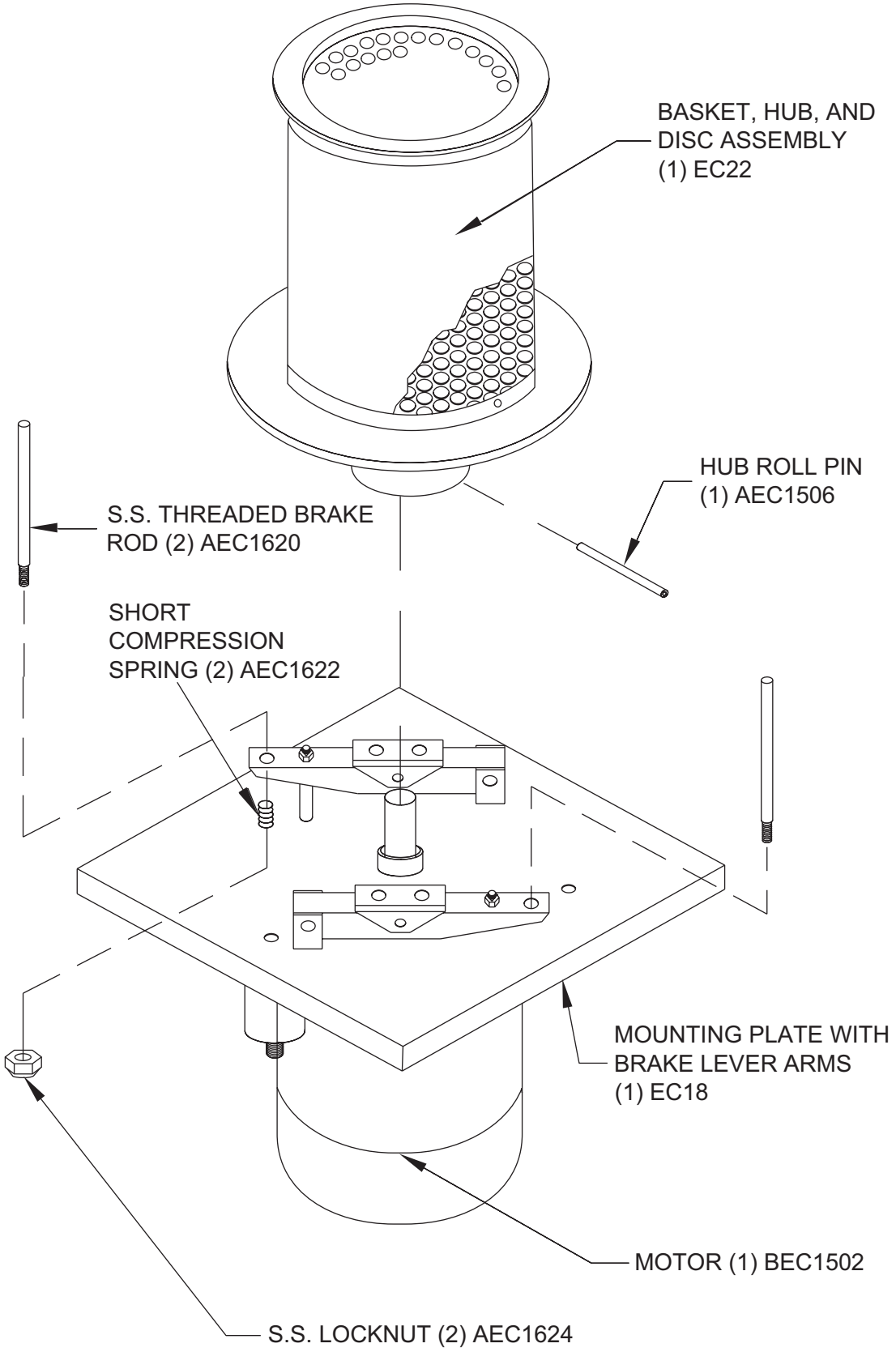
BASKET, HUB, AND
DISC ASSEMBLY
(1) EC22
HUB ROLL PIN
(1) AEC1506
S.S. THREADED BRAKE
ROD (2) AEC1620
SHORT
COMPRESSION
SPRING (2) AEC1622
MOUNTING PLATE WITH
BRAKE LEVER ARMS
(1) EC18
MOTOR (1) BEC1502
S.S. LOCKNUT (2) AEC1624

REMOVE AND REPLACE BRAKE RODS, BASKET, HUB, AND BRAKE DISC ASSEMBLY

Do this FIRST

Make certain you have all the correct parts and fasteners necessary for correct installation. Re-use any components that are not damaged, otherwise replace them. Parts used in this process: (1) EC22 Basket and Brake Disc Assembly, (1) AEC1506 Hub Roll Pin, (2) AEC1620 S.S. Threaded Brake Rods, (2) AEC1622 Short Compression Springs, (2) AEC1624 S.S. Locknuts, and (1) BEC1502 Motor, 115 V 60 Hz. Plus any components required to properly reinstall the Drive Unit Assembly (Page 27) and the Sub-Top and Top Assemblies (Page 19).

REMOVE BRAKE RODS, BASKET, HUB, AND BRAKE DISC ASSEMBLY

1) Remove SUITMATE® unit from the Wall Mount Bracket. See instructions beginning on Page 17.
2) Remove Top and Sub-Top Assemblies. See instructions beginning on Page 19.
3) Remove Drive Unit Assembly. See instructions beginning on Page 27.

   Note: *If Basket itself is damaged it must be replaced, please contact Extractor Corporation at: (Telephone) 800-553-3353, (Fax) 847-742-3552, or (E-Mail) info@suitmate.com.*
4) Remove the Brake Rods from the Drive Unit Assembly by removing the locknut and spring on each Brake Rod. Set the Brake Rods, springs, and locknuts aside for reassembly. Inspect and replace the Short Compression Springs if any wear or deformation is observed.
5) Place a C-clamp over each Brake Lever Arm and under the Motor Mounting Plate. Tighten the C-clamps to allow free rotation of the Basket and Motor shaft.

   Note: *Do not remove C-clamps!*
6) Rotate the Hub so that the hole for the Hub Roll Pin that holds the Hub to the Motor shaft can be clearly seen.
7) Use a hammer and a drift punch to remove the Hub Roll Pin that holds the Hub to the Motor shaft. A new Hub Roll Pin is required for reassembly (Part Number AEC1506).

   Using a small pry bar or large screwdriver, pry up on the Hub to free it from the Motor shaft. Rotate the Hub so that even pressure is exerted evenly around the Hub and Motor shaft. Repeat until you can manually remove the Basket and Brake Disc Assembly from the Motor shaft. Be careful not to damage the Hub or the Motor Mounting Plate. If the Hub is "frozen" to the Motor shaft, please contact Extractor Corporation at: (Telephone) 800-553-3353, (Fax) 847-742-3552, or (E-Mail) info@suitmate.com and explain your problem.

REPLACE BRAKE RODS, BASKET, HUB, AND BRAKE DISC ASSEMBLY

1) Push the Basket, Hub, and Brake Disc Assembly onto the Motor Shaft so that the hole in the Hub lines up with the hole in the Motor Shaft.

   Note: *Apply a light coat of grease to the Motor shaft to facilitate assembly.*

   Note: *It may be necessary to use a 2"x4" piece of wood to tap the Hub down onto the Motor shaft. Do not tap or pound on the basket.*
2) Use a 3/16" drive pin punch to test for the proper hole alignment of the Hub and the Motor Shaft.
3) Drive a NEW Hub Roll Pin (Part Number AEC1506) into the Hub and through the Motor Shaft so that the pin is flush with the Hub.
4) Remove the C-clamps.
5) Reinstall the Brake Rods onto the Drive Unit Assembly by installing the locknut and spring on each Brake Rod removed in step 4 above.
6) Reinstall Drive Unit Assembly. See instructions beginning on Page 27.
7) Reinstall Sub-Top and Top Assemblies. See instructions beginning on Page 19.
8) Reinstall SUITMATE® unit to the Wall Mount Bracket. See instructions beginning on Page 21.
9) Retest the SUITMATE® unit for proper operation, refer to TESTING AND OPERATION on Page 8.

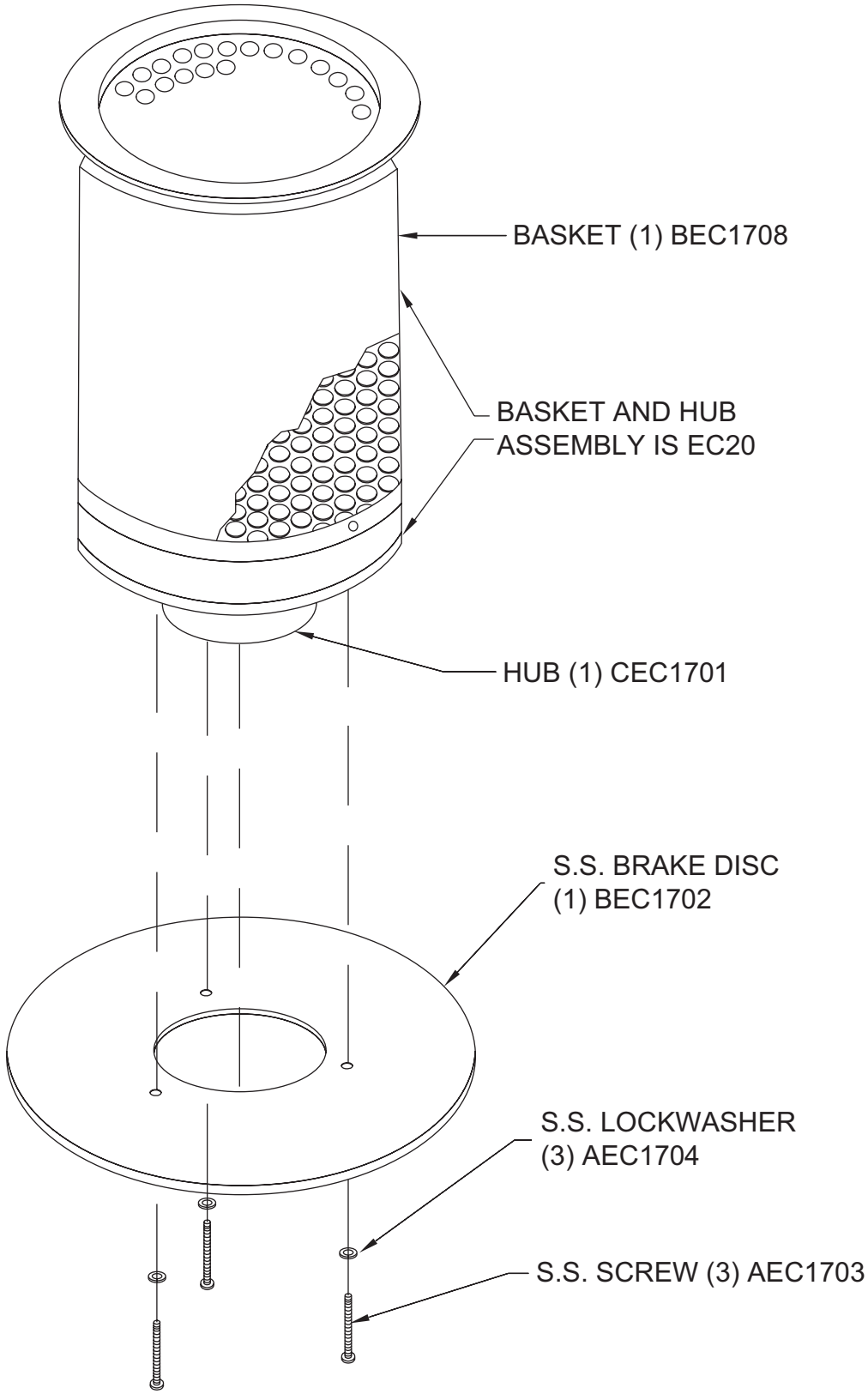
BASKET (1) BEC1708
BASKET AND HUB
ASSEMBLY IS EC20
HUB (1) CEC1701
S.S. BRAKE DISC
(1) BEC1702
S.S. LOCKWASHER
(3) AEC1704
S.S. SCREW (3) AEC1703

REMOVE / REPLACE BRAKE DISC AND BASKET

Do this FIRST

Make certain you have the correct parts and fasteners necessary for correct installation. Re-use any components that are not damaged, otherwise replace them. Parts used in this process: (1) EC20 Basket and Hub Assembly, (1) BEC1702 S.S. Brake Disc, (3) AEC1704 S.S. Lockwashers, (3) AEC1703 S.S. Screws. Plus any components required to properly reinstall the Drive Unit Assembly (Page 27) and the Sub-Top and Top Assemblies (Page 19).

REMOVE BRAKE DISC AND BASKET

1) Remove SUITMATE® unit from the Wall Mount Bracket. See instructions beginning on Page 17.
2) Remove Top and Sub-Top Assemblies. See instructions beginning on Page 19.
3) Remove Drive Unit Assembly. See instructions beginning on Page 27.
4) Remove Brake Rods, Basket, Hub and Brake Disc Assembly. See instructions beginning on Page 31.
5) Remove the (3) screws and washers from the bottom of the Hub Assembly. Set them aside for reassembly.
6) Remove the Brake Disc from the Hub. The Brake Disc may have to be tapped off using a small plastic hammer. Replace if necessary.

REPLACE BRAKE DISC AND BASKET

1) Replace the Brake Disc by assembling it over the Hub and aligning the (3) holes. Secure the Brake Disc using (3) screws and (3) Lock Washers.
2) Reinstall the Brake Disc and Basket Assembly onto the motor shaft. See instructions beginning on Page 31.
3) Reinstall the Brake Rods to the Drive Unit Assembly by installing the locknut and spring on each Brake Rod.
4) Reinstall Drive Unit Assembly. See instructions beginning on Page 27.
5) Reinstall Sub-Top and Top Assemblies. See instructions beginning on Page 21.
6) Reinstall SUITMATE® unit to the Wall Mount Bracket. See instructions beginning on Page 18.
7) Retest the SUITMATE® unit for proper operation, refer to TESTING AND OPERATION on Page 8.

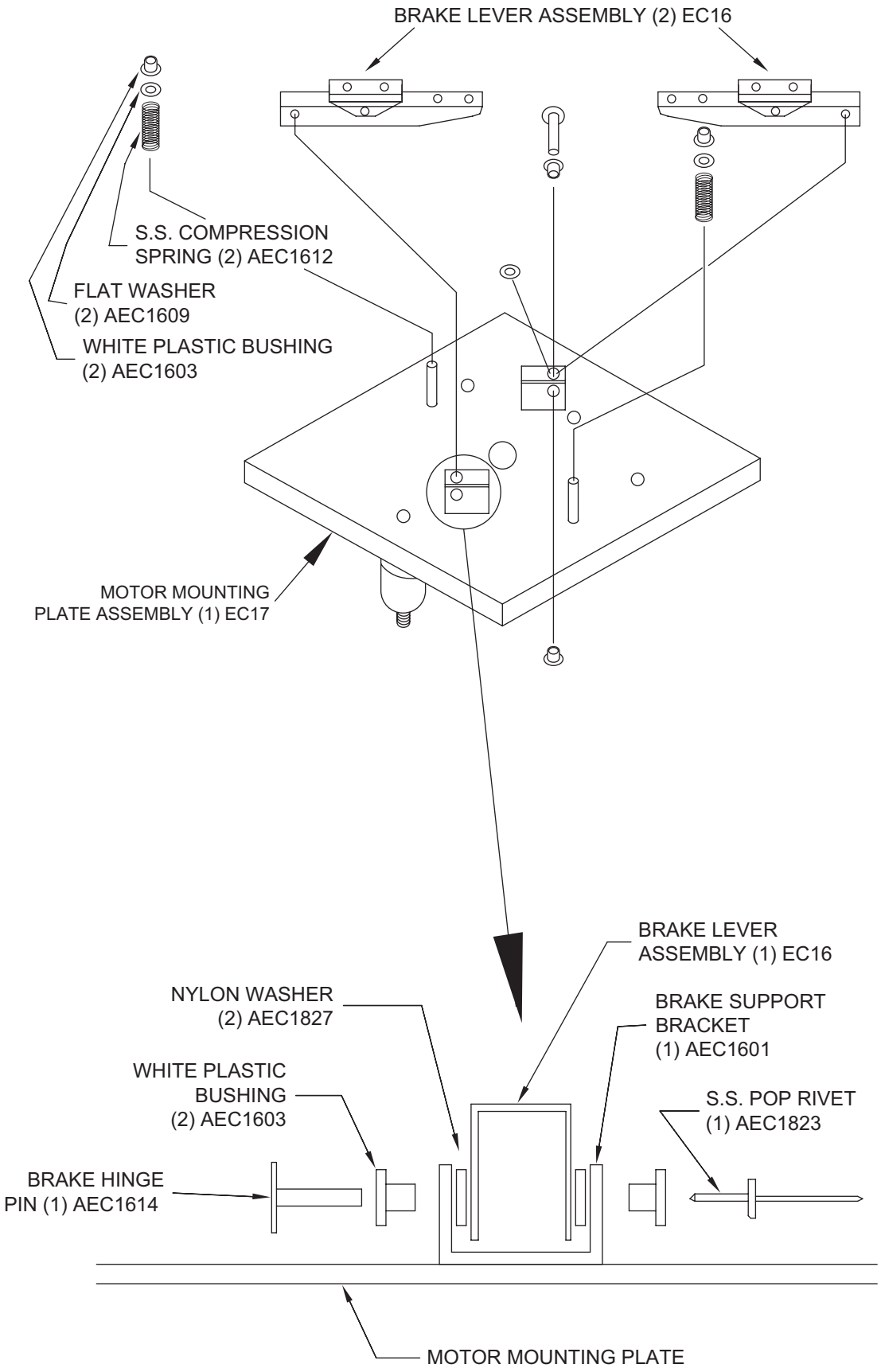
BRAKE LEVER ASSEMBLY (2) EC16
S.S. COMPRESSION SPRING (2) AEC1612
FLAT WASHER (2) AEC1609
WHITE PLASTIC BUSHING (2) AEC1603
MOTOR MOUNTING PLATE ASSEMBLY (1) EC17
BRAKE LEVER ASSEMBLY (1) EC16
NYLON WASHER (2) AEC1827
BRAKE SUPPORT BRACKET (1) AEC1601
WHITE PLASTIC BUSHING (2) AEC1603
S.S. POP RIVET (1) AEC1823
BRAKE HINGE PIN (1) AEC1614
MOTOR MOUNTING PLATE

REMOVE / REPLACE BRAKE LEVER

Do this FIRST

Make certain you have all the correct parts and fasteners necessary for correct installation. Re-use any components that are not damaged, otherwise replace them. Extractor recommends that a Brake Parts Kit AEC2300 be purchased. Parts used in this process: (2) AEC1614 Brake Hinge Pins, (4) AEC1603 White Plastic Bushings, (4) AEC1927 Nylon Washers, (2) EC16 Brake Lever Assemblies, (2) AEC1601 Brake Support Brackets, (2) AEC1823 S.S. Pop Rivets. Plus any components required to properly reinstall the Basket and Brake Disc Assembly (Page 21), the Brake Pad Supports (Page 37), the Drive Unit Assembly (Page 27), and the Sub-Top and Top Assemblies (Page 19).

REMOVE BRAKE LEVER

1) Remove SUITMATE® unit from the Wall Mount Bracket. See instructions beginning on Page 17.
2) Remove Top and Sub-Top Assemblies. See instructions beginning on Page 19.
3) Remove Drive Unit Assembly. See instructions beginning on Page 27.
4) Remove Basket, Hub, and Brake Disc Assembly. See instructions beginning on Page 31.

   Note: *Make certain that the C-clamps have been removed from the Brake Levers.*

5) Remove the Brake compression spring, washer, and plastic bushing. Set them aside for reassembly.

   Note: *Pay attention to the location of the spring, washer and plastic bushing. It is recommended that the compression spring be replaced with a new compression spring.*

6) Remove the rivet that holds the Brake Lever Assembly to the Brake Support Bracket on the Motor Mounting Plate. Refer to drawing on bottom of Page 34.
   a. Punch out the center of each rivet with a small drift punch.
   b. Drill out the rivet.
   c. Chisel off the rivet head.
7) Remove and discard the Brake Hinge Pin.
8) Remove the old Brake Lever Assembly.

   Note: *Pay attention to the placement and alignment of the plastic bushings and plastic washers in the Brake Assembly. Set them aside for reassembly. Inspect the Brake levers, springs and plastic bushings and washers for wear and replace with new ones if necessary.*

9) The Brake Pad Assembly must be removed from the Brake Lever Arm for replacement. Follow instructions on Page 37 if the Brake Pads require replacement.

REPLACE BRAKE LEVER

1) Reinstall the Brake Pad Assembly. See instructions on Page 37.
2) Replace the Brake Lever by reversing the above procedure. A NEW Hinge Pin and pop rivet MUST be used.

   Note: *Be certain that the plastic bushing and washers are in "new" condition and in their proper locations. Make certain to reinstall the C-clamps on the Brake Levers. The height of the Brake Pad should be less than 1 3/8 inches (35mm) high as measured from the Motor Mounting Plate.*

3) Reinstall the Brake Disc and Basket. See instructions beginning on Page 31.
4) Reinstall Drive Unit Assembly. See instructions beginning on Page 27.
5) Reinstall Sub-Top and Top Assemblies. See instructions beginning on Page 21.
6) Reinstall SUITMATE® unit to the Wall Mount Bracket. See instructions beginning on Page 18.
7) Retest the SUITMATE® unit for proper operation, refer to TESTING AND OPERATION on Page 8.

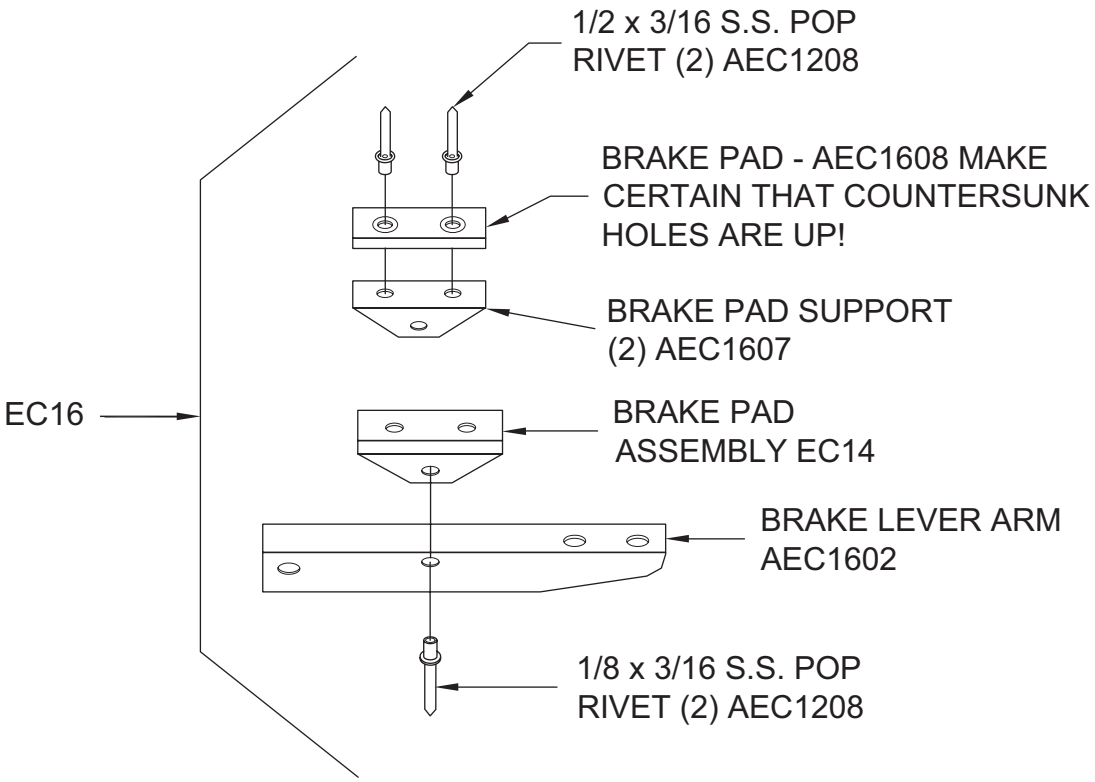

EC16 BRAKE LEVER ASSEMBLY - 2 REQUIRED

REMOVE AND REPLACE BRAKE PADS

Do this FIRST

Make certain you have all the correct parts and fasteners necessary for correct installation. Re-use any parts that are not damaged, otherwise replace them. Extractor recommends that a Brake Parts Kit AEC2300 be purchased. Parts used in this process: (2) AEC1607 Brake Pad Supports, (2) AEC1608 Brake Pads, (8) AEC1208 S.S. Pop Rivets. Plus any components required to properly reinstall the Basket, Hub and Brake Disc Assembly (Page 31), the Brake Lever Assemblies (Page 35), the Drive Unit Assembly (Page 27), and the Sub-Top and Top Assemblies (Page 19).

REMOVE BRAKE PADS

1) Remove SUITMATE® unit from the Wall Mount Bracket. See instructions beginning on Page 17.
2) Remove Top and Sub-Top Assemblies. See instructions beginning on Page 19.
3) Remove Drive Unit Assembly. See instructions beginning on Page 27.
4) Remove Basket, Hub, and Brake Disc Assembly. See instructions beginning on Page 31.
5) Remove Brake Lever Assembly. See instructions beginning on Page 35.
6) Remove the rivets that hold the Brake Pad support to the Brake Lever Assembly.
    a. Punch out the center of each rivet with a small drift punch.
    b. Drill out the rivet.
    c. Chisel off the rivet head. Make certain the rivet is completely removed.
7) Remove the Brake Pad Assembly.
8) Remove the rivets that hold the Brake Pad to the Brake Pad support bracket.
    a. Punch out the center of each rivet with a small drift punch.
    b. Drill out the rivet.
    c. Chisel off the rivet head. Make certain the rivet is completely removed.
9) Remove the old Brake Pad.

REPLACE BRAKE PAD

1) Align the holes on the new Brake Pad with the holes of the Brake Pad support.

   Note: *Make certain the Brake Pad has the Countersunk holes on the top.*
2) Rivet the Brake Pad to the Brake Pad support using AEC1208 S.S. Pop Rivets.
3) Align the holes on the side of the Brake Pad Support with the holes in the side of the Brake Lever. The Brake Pad Support should have a snug fit on the Brake Lever so that it does NOT move freely but can still be moved. Secure the Brake Pad Support to the Brake Lever Arm using new AEC1208 S.S. Pop Rivets.
4) Reinstall the Brake Lever Assemblies. See instructions beginning on Page 35.
5) Reinstall Basket, Hub, and Brake Disc Assembly. See instructions beginning on Page 31.
6) Reinstall Drive Unit Assembly. See instructions beginning on Page 27.
7) Reinstall Sub-Top and Top Assemblies. See instructions beginning on Page 21.
8) Reinstall SUITMATE® unit to the Wall Mount Bracket. See instructions beginning on Page 18.
9) Retest the SUITMATE® unit for proper operation, refer to TESTING AND OPERATION on Page 8.

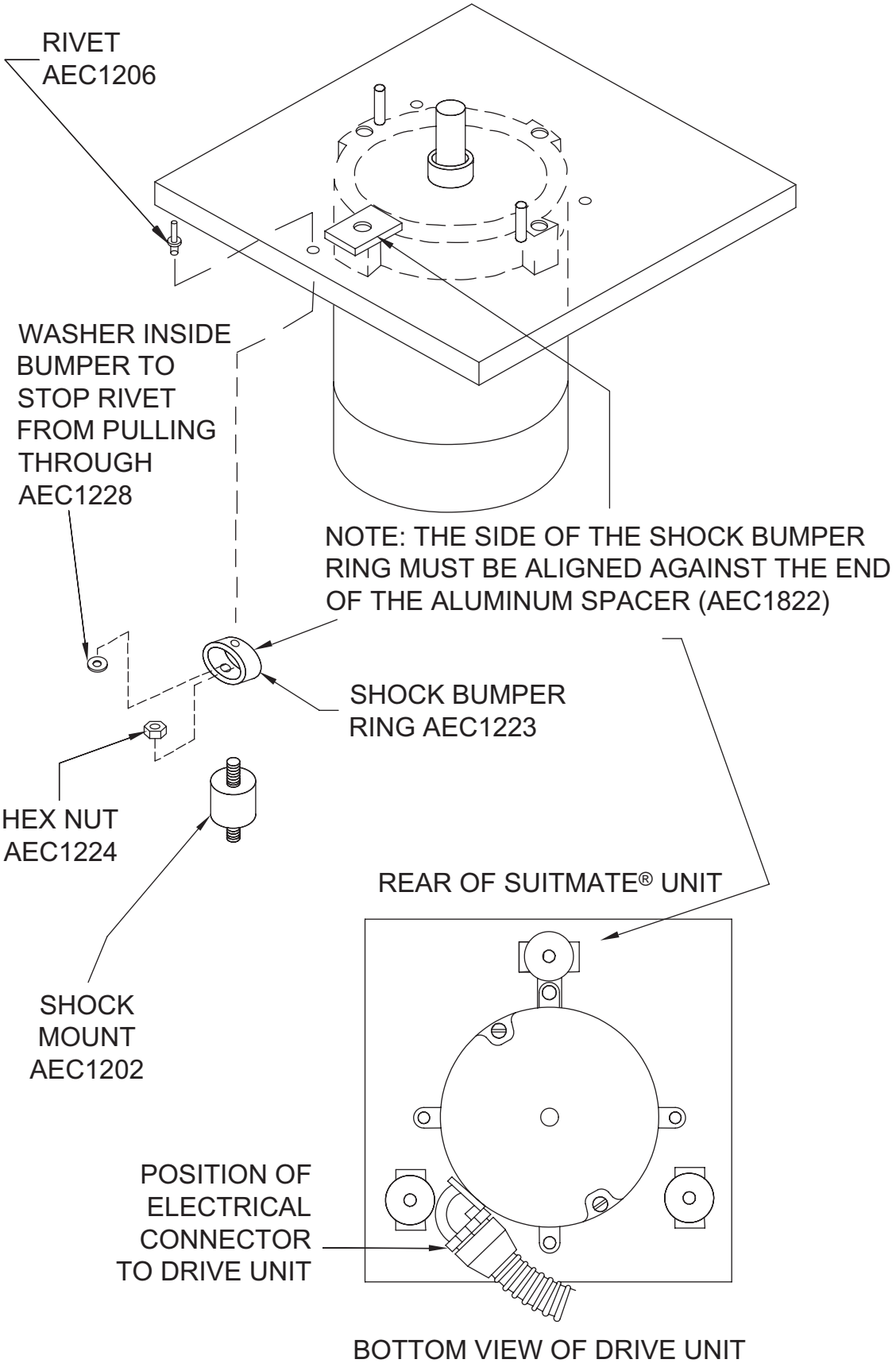
RIVET
AEC1206
WASHER INSIDE BUMPER TO STOP RIVET FROM PULLING THROUGH AEC1228
NOTE: THE SIDE OF THE SHOCK BUMPER RING MUST BE ALIGNED AGAINST THE END OF THE ALUMINUM SPACER (AEC1822)
SHOCK BUMPER RING AEC1223
HEX NUT AEC1224
SHOCK MOUNT AEC1202
REAR OF SUITMATE® UNIT
POSITION OF ELECTRICAL CONNECTOR TO DRIVE UNIT
BOTTOM VIEW OF DRIVE UNIT

REMOVE AND REPLACE SHOCK MOUNTS

Do this FIRST

Make certain you have all the correct parts and fasteners necessary for correct installation. Re-use any components that are not damaged, otherwise replace them. Parts used in this process: (3) AEC1202 Shock Mounts, (3) AEC1224 S.S. Nuts. Plus any components required to properly reinstall the Drive Unit Assembly (Page 27) and the Sub-Top and Top Assemblies (Page 19).

REMOVE SHOCK MOUNTS

1) Remove SUITMATE® unit from the Wall Mount Bracket. See instructions beginning on Page 17.
2) Remove Top and Sub-Top Assemblies. See instructions beginning on Page 19.
3) Remove Drive Unit Assembly. See instructions beginning on Page 27.
4) Remove the S.S. Nut that secures the Shock Mount to the Shock Bumper Ring.
5) Remove the Shock Mount from the Shock Bumper Ring.

REPLACE SHOCK MOUNTS

1) Install the new Shock Mount to the Shock Bumper Ring and secure using the S.S. Nut.

   Note: *Use new S.S. Nuts if necessary.*

2) Reinstall Drive Unit Assembly. See instructions beginning on Page 27.
3) Reinstall Sub-Top and Top Assemblies. See instructions beginning on Page 19.
4) Reinstall SUITMATE® unit to the Wall Mount Bracket. See instructions beginning on Page 18.
5) Retest the SUITMATE® unit for proper operation, refer to TESTING AND OPERATION on Page 8.

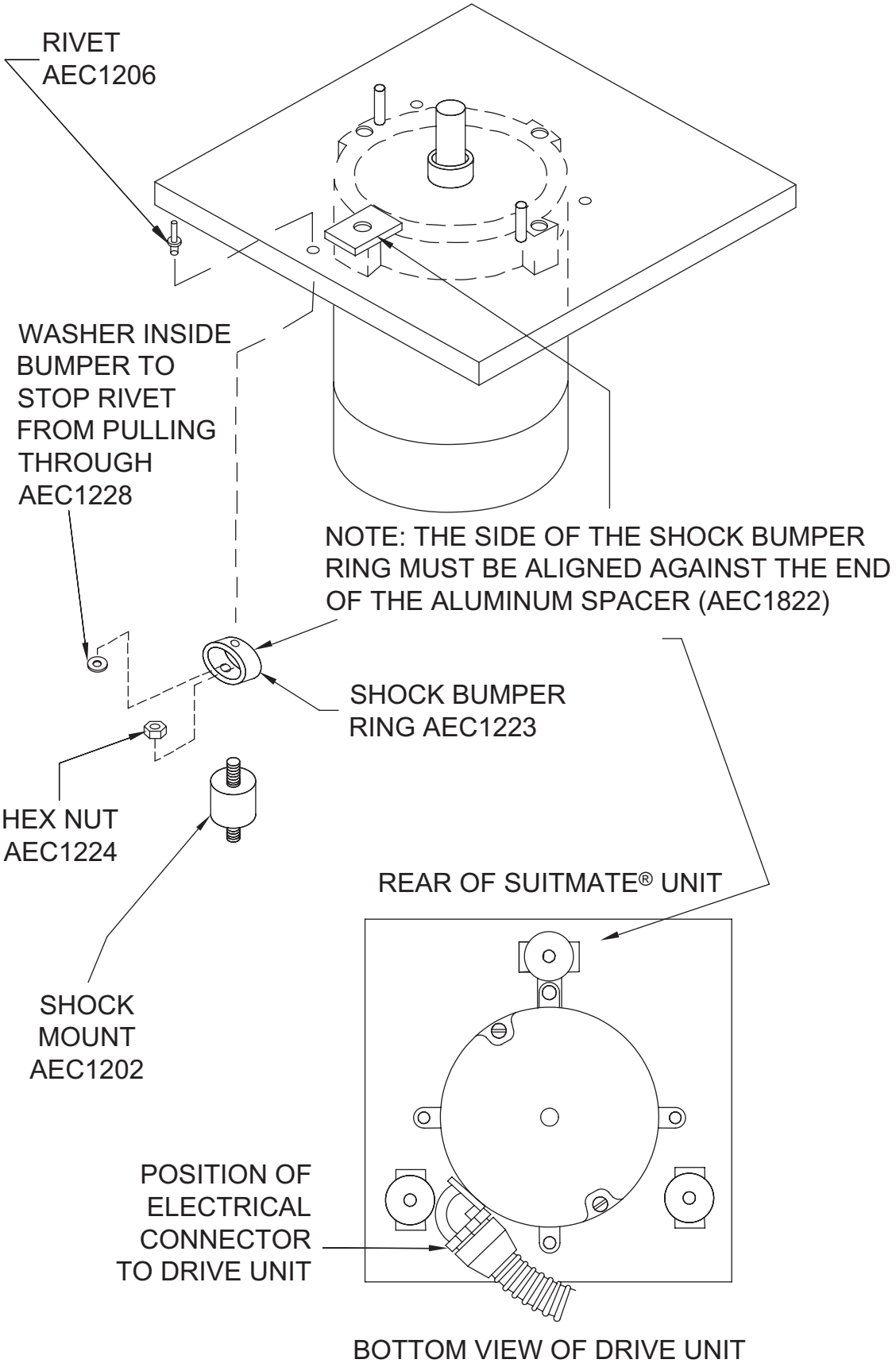
RIVET
AEC1206
WASHER INSIDE BUMPER TO STOP RIVET FROM PULLING THROUGH AEC1228
NOTE: THE SIDE OF THE SHOCK BUMPER RING MUST BE ALIGNED AGAINST THE END OF THE ALUMINUM SPACER (AEC1822)
SHOCK BUMPER RING AEC1223
HEX NUT AEC1224
SHOCK MOUNT AEC1202
REAR OF SUITMATE® UNIT
POSITION OF ELECTRICAL CONNECTOR TO DRIVE UNIT
BOTTOM VIEW OF DRIVE UNIT

REMOVE AND REPLACE SHOCK BUMPER RINGS

Do this FIRST

Make certain you have all the correct parts and fasteners necessary for correct installation. Re-use any components that are not damaged, otherwise replace them. Parts used in this process: (3) AEC1223 Shock Bumper Rings, (3) AEC1228 Washers, (3) AEC1206 S.S. Pop Rivets. Plus any components required to properly reinstall the Shock Mounts (Page 39), the Basket, Hub and Brake Disc Assembly (Page 31), the Drive Unit Assembly (Page 27), and the Sub-Top and Top Assemblies (Page 19).

REMOVE SHOCK BUMPER RINGS

1) Remove SUITMATE® unit from the Wall Mount Bracket. See instructions beginning on Page 17.

2) Remove Top and Sub-Top Assemblies. See instructions beginning on Page 19.

3) Remove Drive Unit Assembly. See instructions beginning on Page 27.

4) Remove the (3) S.S. Nuts that secure the (3) Shock Mounts to the (3) Shock Bumper Rings.

5) Remove the Shock Mount from the Shock Bumper Ring.

Note: *Examine the positions of the 3 Shock Bumper Rings. Two Bumper Rings should be parallel to each other. The third should be perpendicular to the other two. See Bottom View of Drive Unit on Page 40 for details.*

6) Remove the rivet that holds the Shock Bumper Ring to the Motor Mounting Plate.

a. Punch out center of the rivet with a small drift punch.

b. Drill out the rivet.

c. Chisel off the rivet head. Make sure the rivet is completely removed.

Note: *Set aside the small washer that helps to secure the Shock Bumper Ring to the Motor Mounting Plate. If the washers are deformed, they must be replaced.*

REPLACE SHOCK BUMPER RINGS

1) Rivet the Shock Bumper Ring to the Motor Mounting Plate.

Note: *Be certain to use the small washer (AEC1228) in riveting the Shock Bumper Ring to the Motor Mounting Plate. Make certain the Shock Bumper Ring Assembly is properly aligned with the other two Bumper Rings. Failure to do so will prevent proper reassembly of the SUITMATE® unit.*

2) Apply clear Silicone sealer (available locally) on the rivet head located on top of the Motor Mounting Plate.

3) Reinstall the (3) Shock Mounts. See instructions beginning on page 39.

4) Reinstall Drive Unit Assembly. See instructions beginning on Page 27.

5) Reinstall Sub-Top and Top Assemblies. See instructions beginning on Page 19.

6) Reinstall the SUITMATE® unit to the Wall Mount Bracket. See instructions beginning on Page 18.

7) Retest the SUITMATE® unit for proper operation, refer to TESTING AND OPERATION on Page 8.

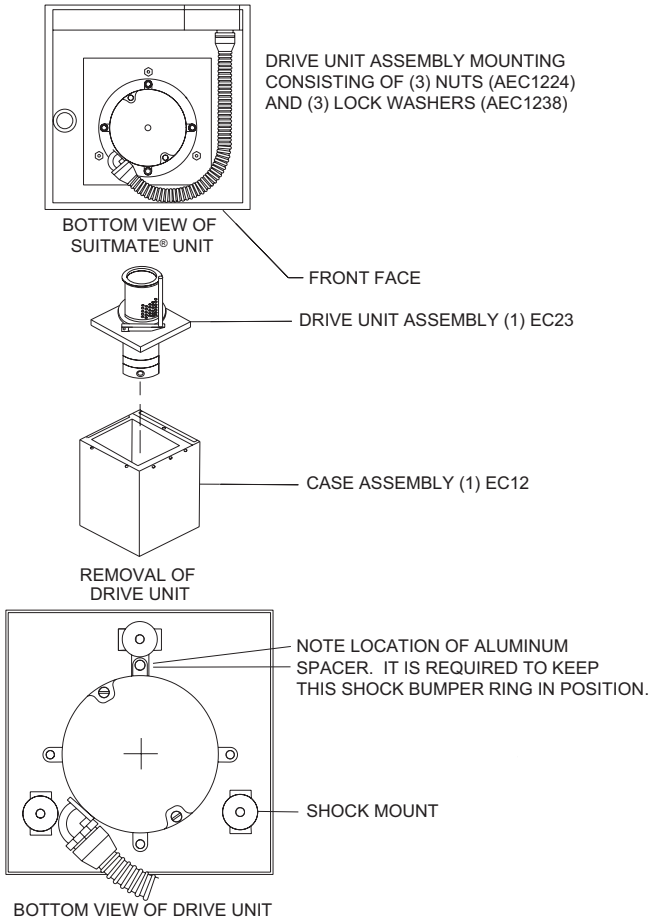

Photograph shows the Correct Position of Wires for Rewiring the Motor

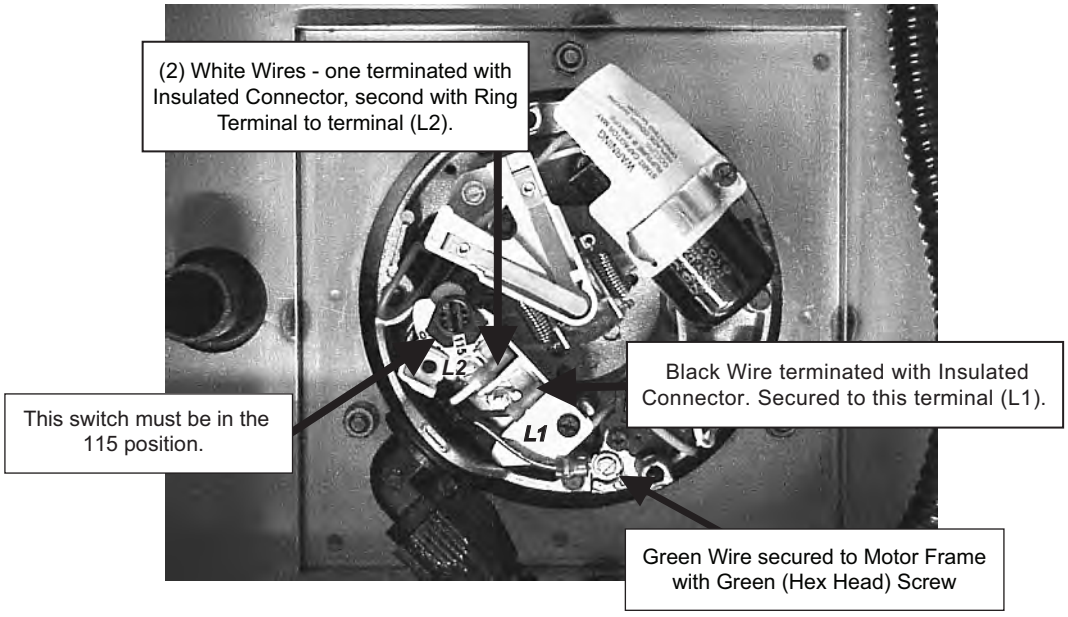

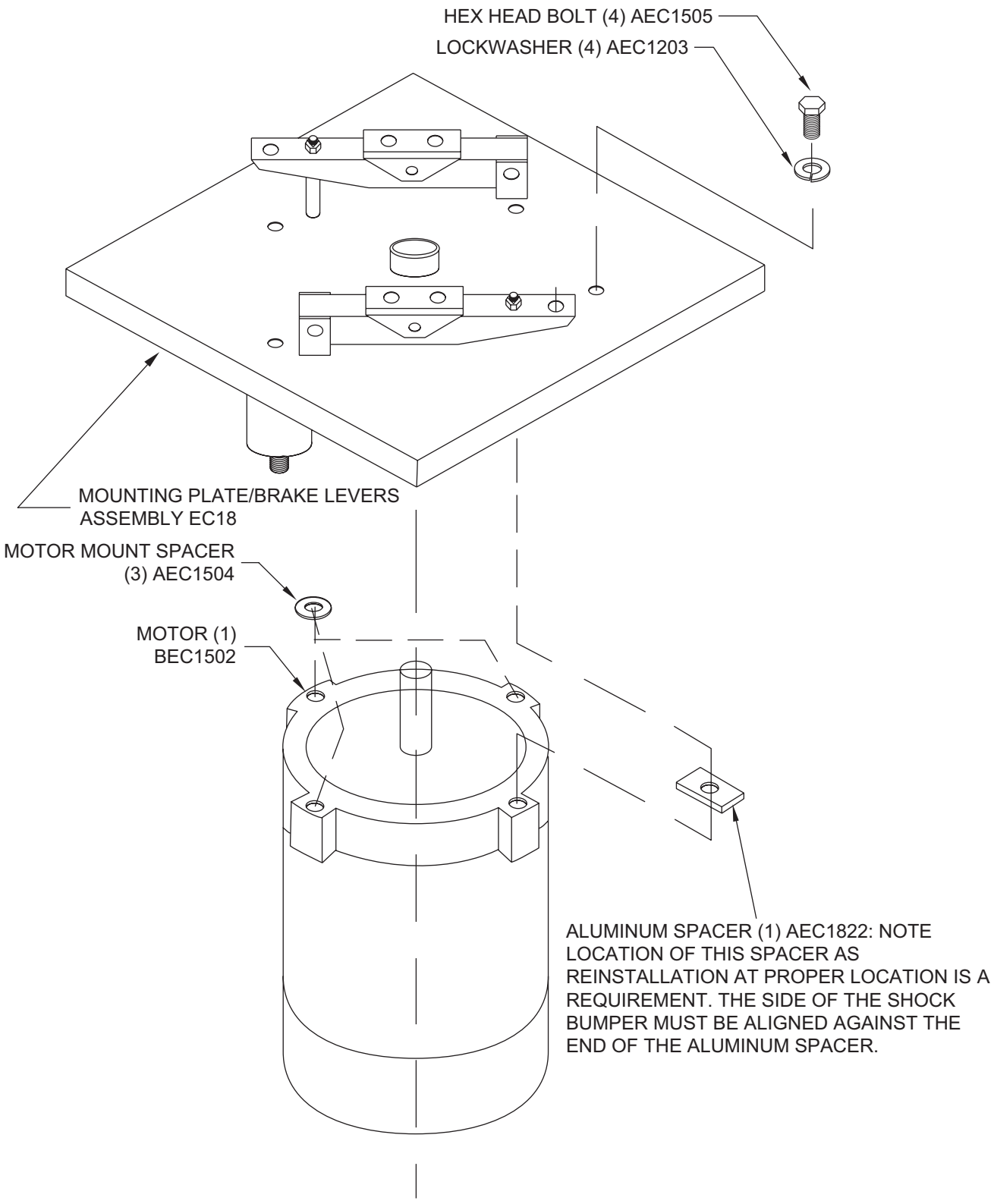
HEX HEAD BOLT (4) AEC1505
LOCKWASHER (4) AEC1203
MOUNTING PLATE/BRAKE LEVERS ASSEMBLY EC18
MOTOR MOUNT SPACER (3) AEC1504
MOTOR (1) BEC1502
ALUMINUM SPACER (1) AEC1822: NOTE LOCATION OF THIS SPACER AS REINSTALLATION AT PROPER LOCATION IS A REQUIREMENT. THE SIDE OF THE SHOCK BUMPER MUST BE ALIGNED AGAINST THE END OF THE ALUMINUM SPACER.

Location of AEC1822 Aluminum Spacer

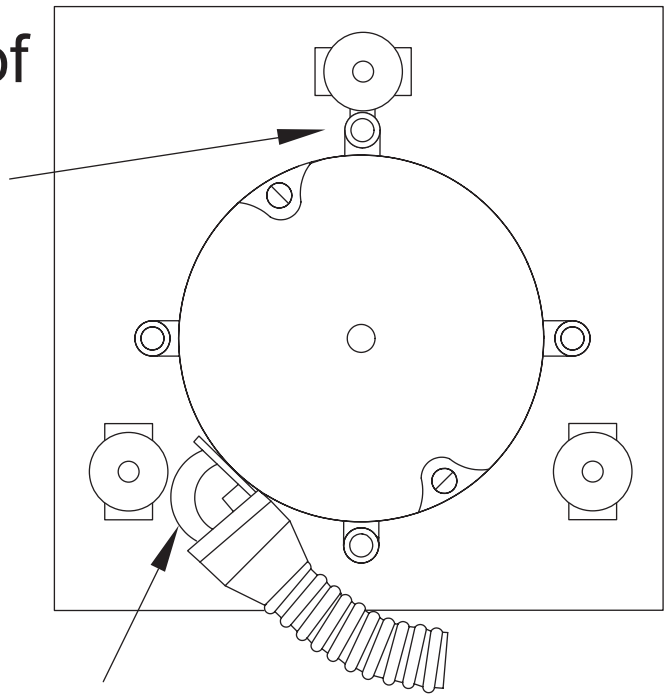

Position of 90° Electrical connector to drive unit

REMOVE AND REPLACE MOTOR

Do this FIRST

Make certain you have all the correct parts and fasteners necessary for correct installation. Re-use any parts that are not damaged, otherwise replace them. Parts used in this process: (1) AEC1822 Aluminum Spacer, (3) AEC1504 Motor Mount Spacers, (4) AEC1505 Hex Head Bolts, (4) AEC1203 Lock Washers, and (1) BEC1502 Motor 115-V 60-Hz. Plus any components required to properly reinstall the Basket, Hub, and Brake Disc Assembly (Page 31), the Drive Unit Assembly (Page 27), and the Sub-Top and Top Assemblies (Page 19).

REMOVE MOTOR FROM MOUNTING PLATE

1) Remove SUITMATE® unit from the Wall Mount Bracket. See instructions beginning on Page 17.
2) Remove Top and Sub-Top Assemblies. See instructions beginning on Page 19.
3) Remove Drive Unit Assembly. See instructions beginning on Page 27.
4) Remove Basket, Hub, and Brake Disc Assembly. See instructions beginning on Page 31.
5) Referring to photograph and drawings on Page 42 through 44, remove the (4) Hex Head Bolts, Lock Washers, and Motor Mount Spacers that hold the Motor to the Mounting Plate.

   Note: *Examine the placement of the (4) spacers, especially the AEC1822 Aluminum Spacer next to the Shock Bumper Ring. The rectangular spacer prevents the Shock Bumper Ring from moving. Examine the location of the Motor for the* 90° *connector in relation to the three Shock Mounts.*
6) Remove the Motor and set aside.

REPLACE MOTOR

1) Replace the motor using the (4) bolts and (4) lock washers, especially noting placement of the AEC1822 Aluminum Spacer next to the Shock Bumper Ring. See Bottom View of Drive Unit on Page 44 for detail. In addition see the photograph and drawings on Pages 42 and 43.
2) Reinstall Basket, Hub, and Brake Disc Assembly. See instructions beginning on Page 31.
3) Reinstall Drive Unit Assembly. See instructions beginning on Page 27.
4) Reinstall Sub-Top and Top Assemblies. See instructions beginning on Page 19.
5) Reinstall the SUITMATE® unit to the Wall Mount Bracket. See instructions beginning on Page 18.
6) Retest the SUTIMATE® unit for proper operation. Refer to TESTING AND OPERATION on Page 8.

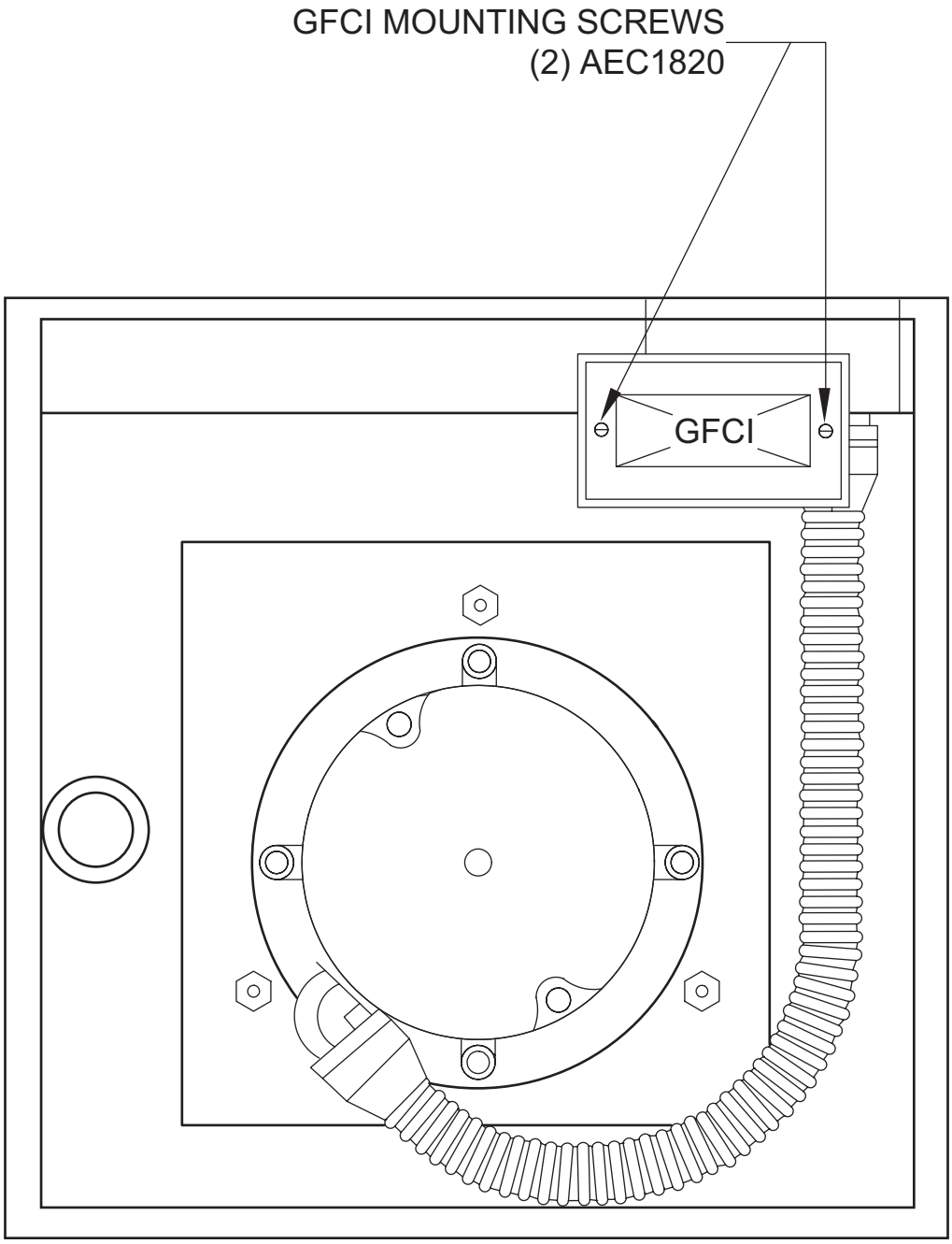

BOTTOM VIEW OF SUITMATE® UNIT

ELECTRICAL ASSEMBLIES

115-V 20-Amp 60-Hz Self-Timed Unit

GENERAL

When servicing the SUITMATE® unit, observe the following safety precautions:

Always turn off the power at the circuit breaker – place a lockout tag on the circuit breaker panel indicating that the breaker is not to be turned on except by authorized personnel – and disconnect the unit before doing any work on the SUITMATE® unit. Simply turning off a switch is NOT enough.

Use only proper tools, test equipment, and work practices when servicing the SUITMATE® unit. If there are any questions concerning proper tools, equipment or practices, please contact the factory for recommendations at: (Telephone) (800) 553-3353, (Fax) 847-742-3552, or (E-Mail) info@suitmate.com.

Due to critical tolerances, use only specified replacement parts. See the SUITMATE® UNIT PARTS AND ASSEMBLIES list in this manual.

REMOVE AND REPLACE GFCI

The GFCI can be serviced from the bottom of the unit without removing the unit from the wall.

Do this FIRST

Make certain you have all the correct parts and fasteners necessary for correct installation. Parts used in this process: (1) AEC2009 GFCI 115V 60Hz.

REMOVE GFCI

1) Turn off the main electrical power to the unit – place a lockout tag on the circuit breaker panel indicating that the breaker is not to be turned on except by authorized personnel, and disconnect the unit before doing any work on the SUITMATE® unit. Simply turning off a switch in NOT enough.
2) Remove the cover of the weatherproof Junction Box that contains the GFCI. Set the cover and (2) screws aside for reassembly.
3) Remove the GFCI from the weatherproof Junction Box by removing the (2) GFCI mounting screws.

REPLACE GFCI

1) Remove the wires, one at a time, and put each wire in the matching position on the new GFCI.
2) Place the newly wired GFCI into the weatherproof Junction Box and secure it.
3) Replace the cover of the weatherproof Junction Box using the (2) screws previously removed.
4) Turn on the main electrical power to the unit and retest to assure proper operation. Refer to TESTING AND OPERATION on page 8.

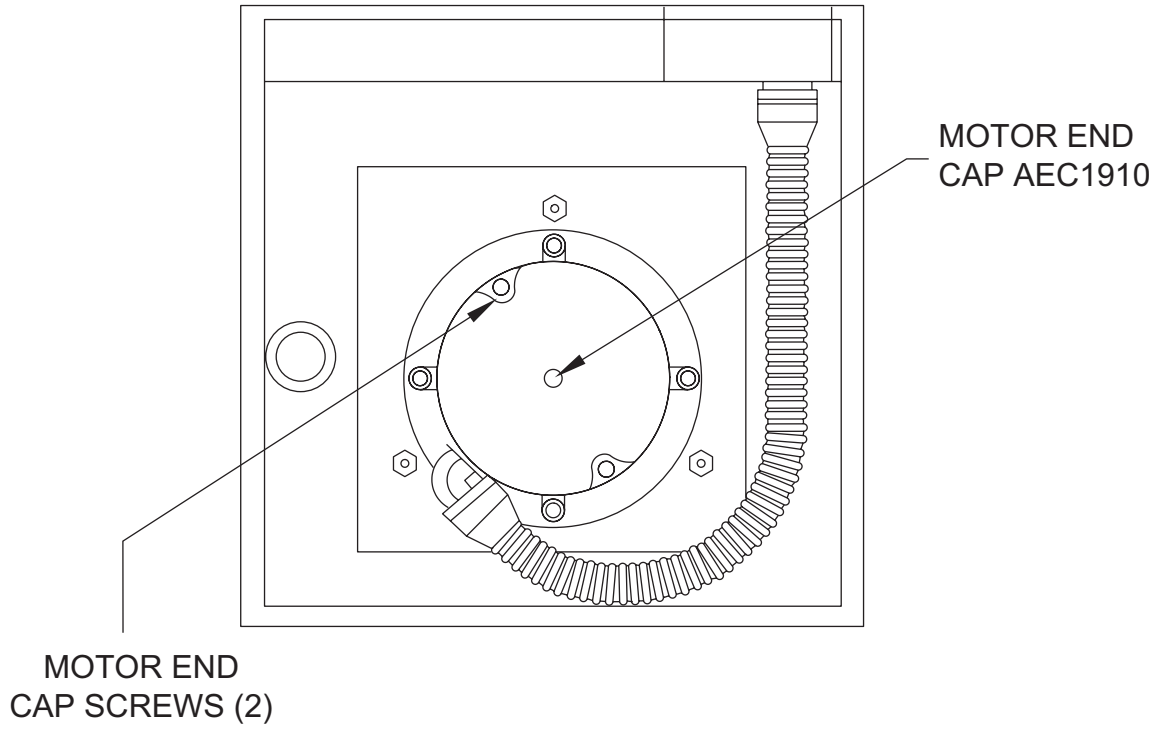

Photograph shows the location of various motor components

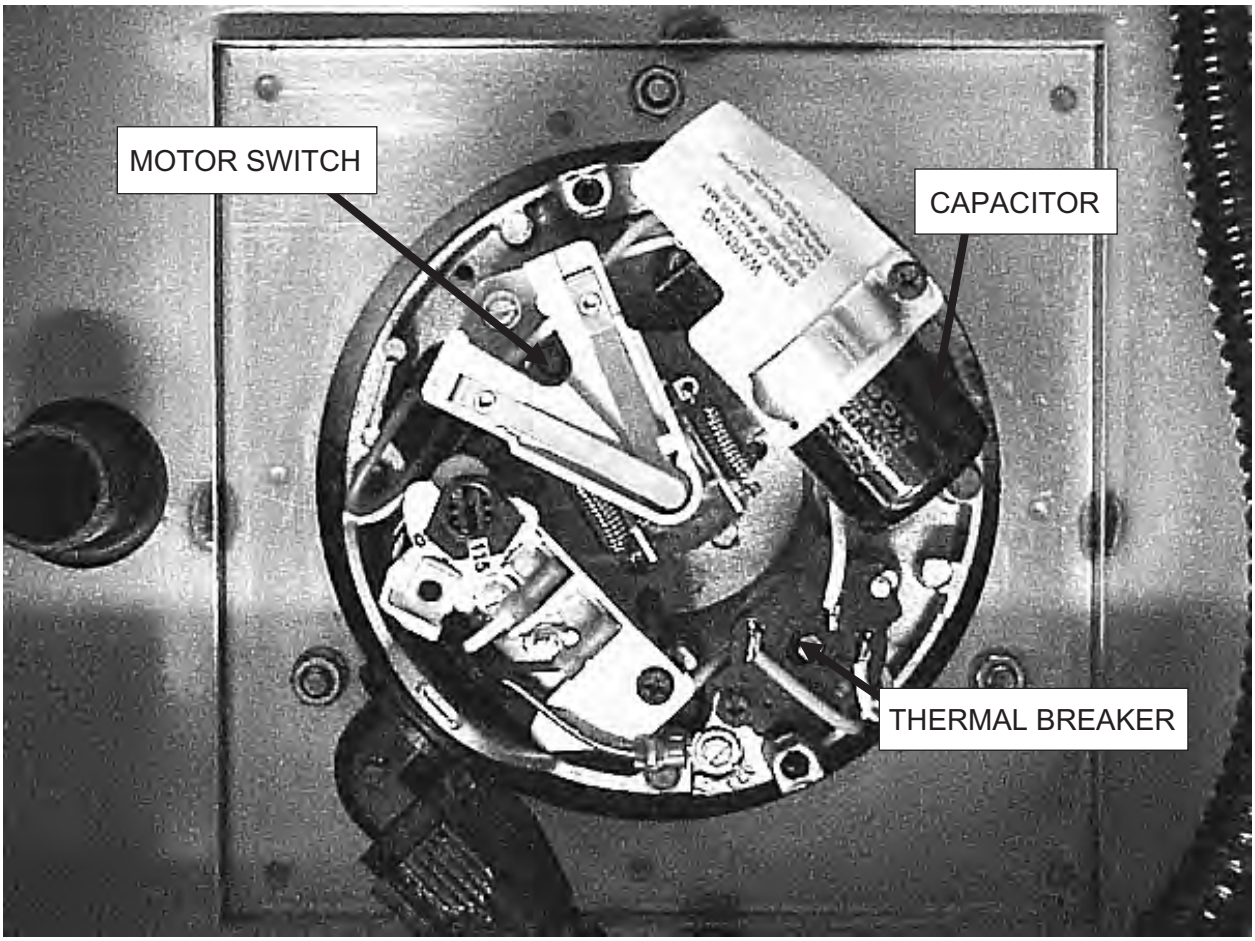

REMOVE AND REPLACE MOTOR CAPACITOR

The Motor Capacitor can be serviced from the bottom of the unit without removing the unit from the wall.

Do This FIRST

Make certain you have all the correct parts and fasteners necessary for correct installation. Parts used in this process: (1) AEC1906 Motor Capacitor.

REMOVE MOTOR CAPACITOR

1) Turn off the main electrical power to the unit – place a lockout tag on the circuit breaker panel indicating that the breaker is not to be turned on except by authorized personnel and disconnect the unit before doing any work on the SUITMATE® unit. Simply turning off a switch is NOT enough.
2) Remove the Motor end cap by loosening the (2) captive screws and setting the end cap aside.
3) Remove the screw on the Motor's post that holds the Capacitor retaining piece and the plastic shield. Set the pieces of the shield aside for reassembly.

   Note: *Carefully note the position and location of the old Capacitor as the new Capacitor MUST be installed in the same position and location as the old one. Refer to Page 48 for additional information.*

REPLACE MOTOR CAPACITOR

1) Remove the wires, one at a time, from the old Capacitor and put each wire in the matching position on the new Capacitor.
2) Remove the old Capacitor and position the newly wired Capacitor in the Motor end using the previously removed plastic shield and retaining piece. Tighten the screw on the Motor post.
3) Replace the previously removed Motor end cap.
4) Turn on the main electrical power to the unit and retest to assure proper operation. Refer to TESTING AND OPERATION on Page 8.

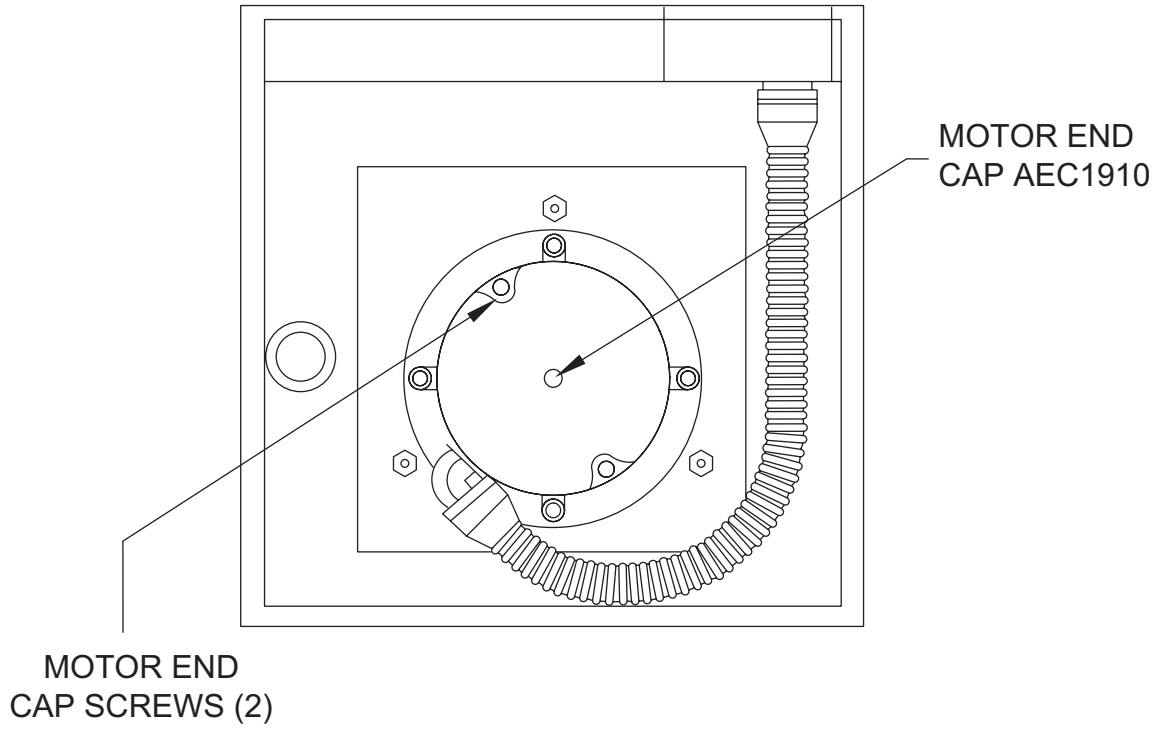

Photograph shows the location of various motor components

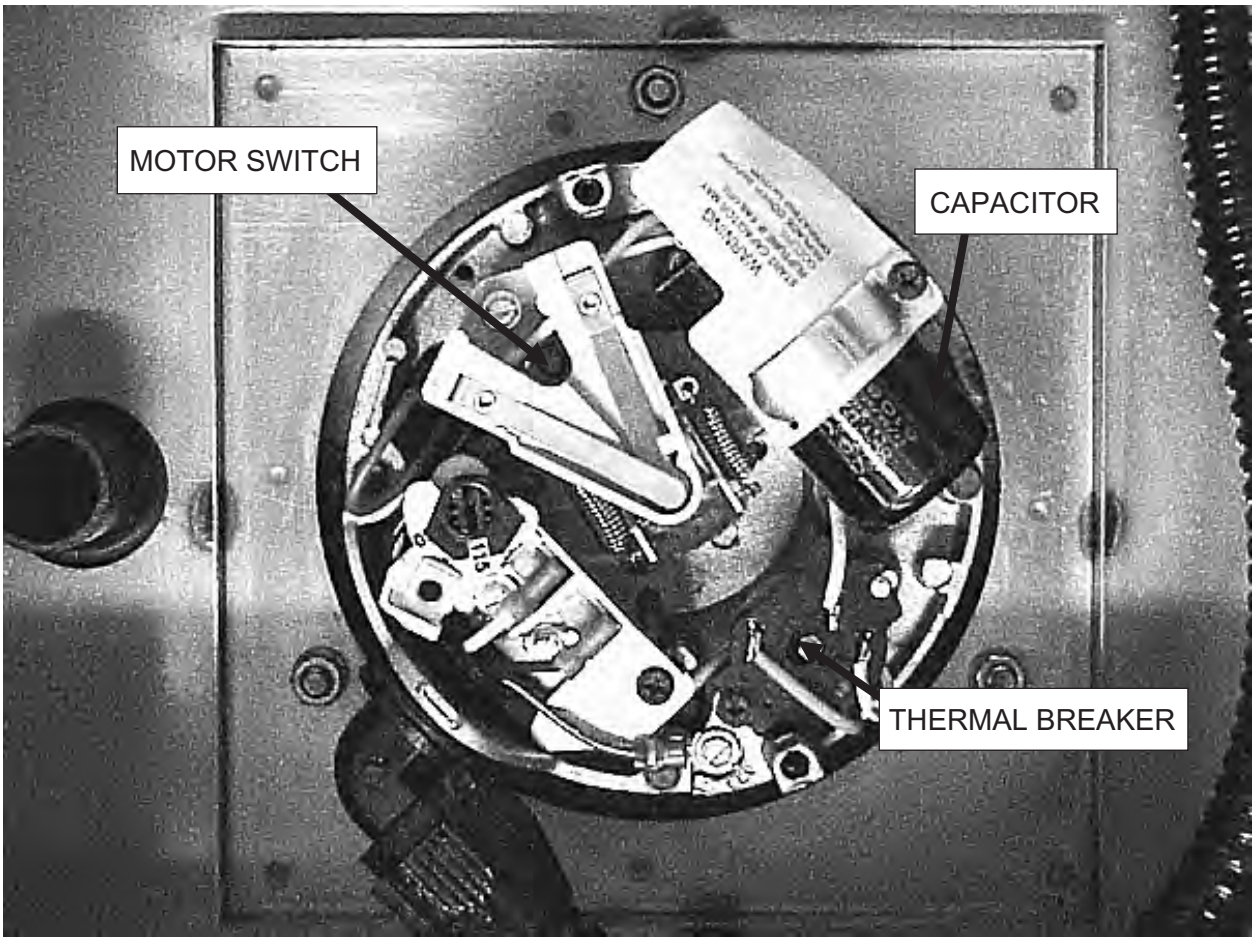

REMOVE AND REPLACE THERMAL BREAKER

The Thermal Breaker can be serviced from the bottom of the unit without removing the unit from the wall

Do this FIRST

Make certain you have all the correct parts and fasteners necessary for correct installation. Parts used in this process: (1) AEC1908 Thermal Breaker.

REMOVE THERMAL BREAKER

1) Turn off the main electrical power to the unit – place a lockout tag on the circuit breaker panel indicating that the breaker is not to be turned on except by authorized personnel and disconnect the unit before doing any work on the SUITMATE® unit. Simply turning off a switch is NOT enough.
2) Remove the Motor end cap by loosening the (2) captive screws and setting the end cap aside.
3) Remove the hex head screw holding the Thermal Breaker in place. Set them aside for reassembly later.

   Note: *Carefully note the position and location of the old Thermal Breaker as the new Thermal Breaker MUST be installed in the same position and location as the old one. Refer to Page 50 for additional information.*

REPLACE THERMAL BREAKER

1) Remove the wires, one at a time, from the Motor and replace them with the same color wires from the new Thermal Breaker. Note the color and the post which it is attached.
2) Replace the old Thermal Breaker with the newly connected Thermal Breaker.
3) Position the Thermal Breaker in the Motor and tighten the hex head screw previously removed.
4) Replace the previously removed Motor end cap.
5) Turn on the main electrical power to the unit and retest to assure proper operation. Refer to TESTING AND OPERATION on Page 8.

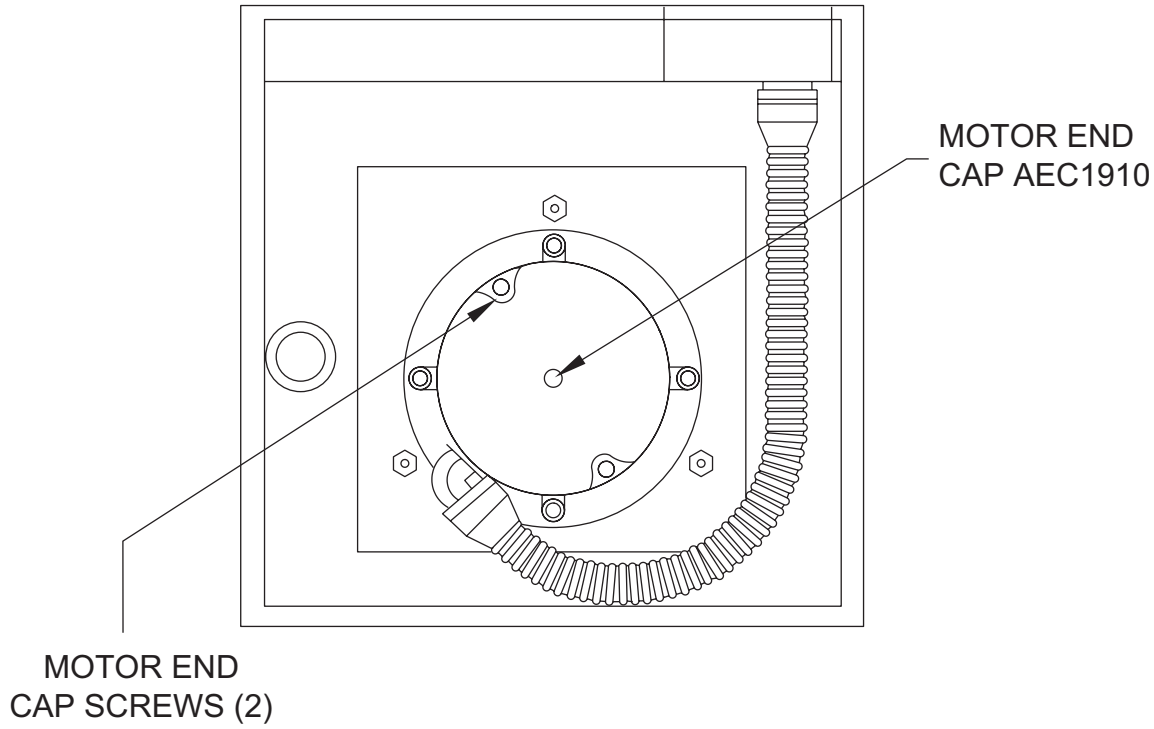

Photograph shows the location of various motor components

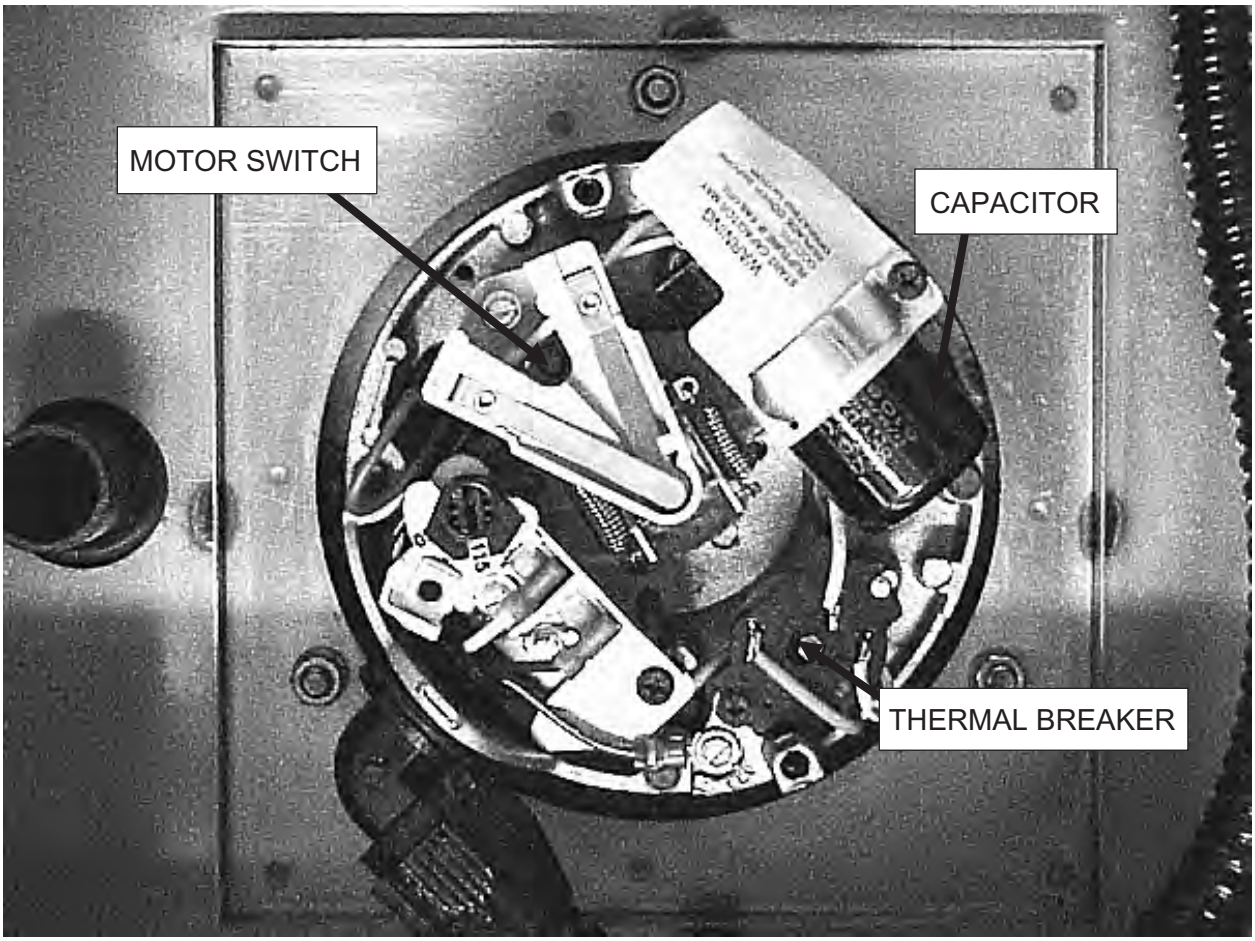

REMOVE AND REPLACE MOTOR SWITCH

The Motor Switch can be serviced from the bottom of the unit without removing the unit from the wall.

Do This FIRST

Make certain you have all the correct parts and fasteners necessary for correct installation. Parts used in this process: (1) AEC1905 Motor Switch.

REMOVE MOTOR SWITCH

1) Turn off the main electrical power to the unit – place a lockout tag on the circuit breaker panel indicating that the breaker is not to be turned on except by authorized personnel and disconnect the unit before doing any work on the SUITMATE® unit. Simply turning off a switch is NOT enough.
2) Remove the Motor end cap by loosening the (2) captive screws and setting the end cap aside.
3) Remove the hex head screw holding the Motor Switch in place. Set it aside for reassembly.

   Note: *Carefully note the position and location of the old Motor Switch, as the new Motor Switch must be installed in the same position and location as the old one. Refer to Page 52 for additional information.*

REPLACE MOTOR SWITCH

1) Remove the wires, one at a time, from the Motor Switch. Put each wire in the matching position on the new Motor Switch.
2) Replace the old Motor Switch with the newly connected Motor Switch. Position the Motor Switch in the Motor and tighten the hex head screw previously removed.
3) Replace the previously removed Motor end cap.
4) Turn on the main electrical power to the unit and retest to assure proper operation. Refer to TESTING AND OPERATION on Page 8.

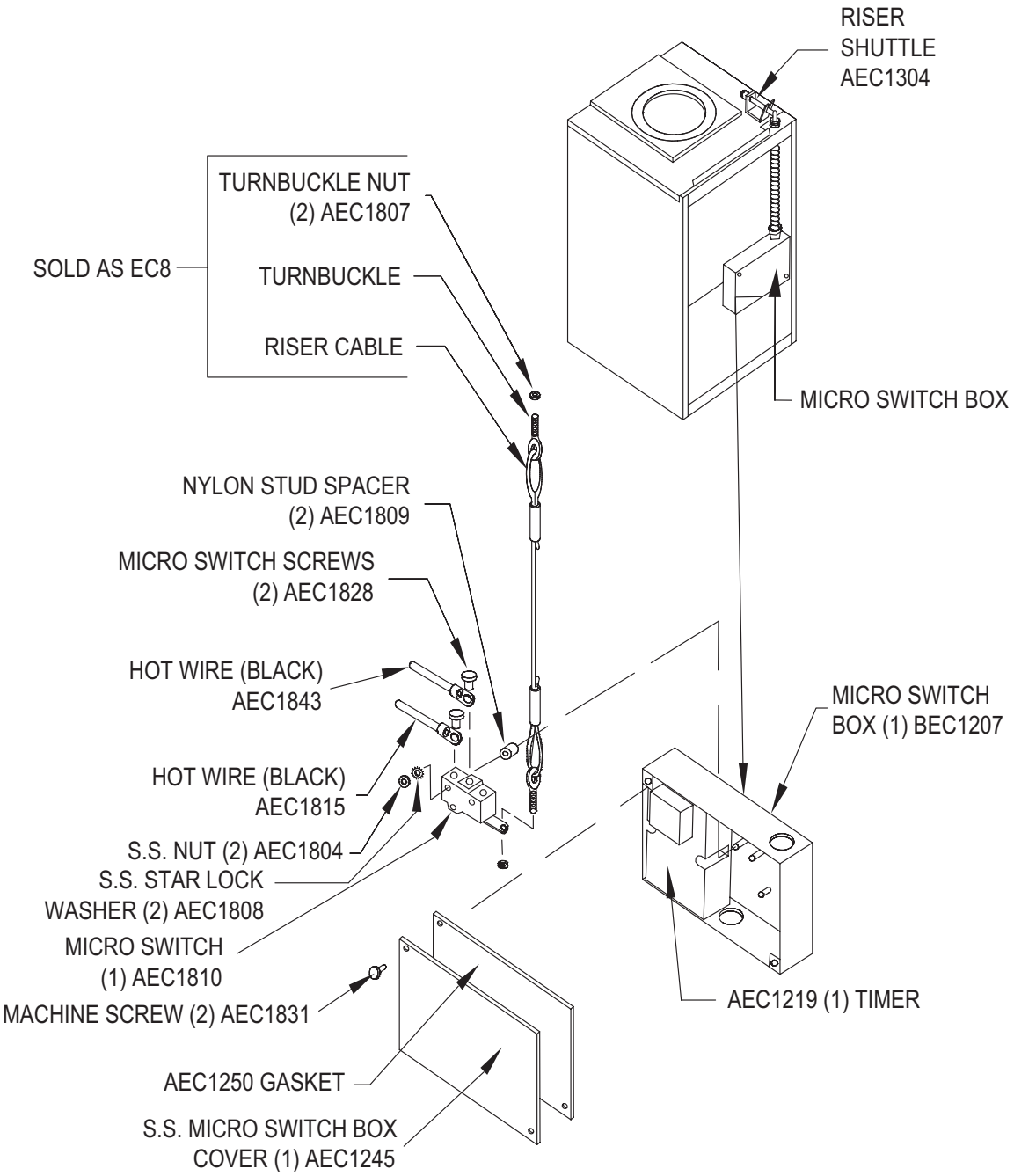

Refer to Wiring Diagram on Page 7 for details

REMOVE AND REPLACE MICRO SWITCH

Do this FIRST

Make certain you have all the correct parts and fasteners necessary for correct installation. Parts used in this process: (1) AEC1810 Micro Switch, (2) AEC1808 Star Lock Washers, (2) AEC1804 S.S. Nuts, (2) AEC1831 Machine Screws, (1) AEC1250 Gasket, and (1) AEC1245 Micro Switch Box Cover.

REMOVE MICRO SWITCH

1) Turn off the main electrical power to the unit – place a lockout tag on the circuit breaker panel indicating that the breaker is not to be turned on except by authorized personnel and disconnect the unit before doing any work on the SUITMATE® unit. Simply turning off a switch is NOT enough.
2) Remove SUITMATE® unit from the Wall Mount Bracket. See instructions beginning on Page 17. Place the SUITMATE® unit on its front side.
3) Remove the Micro Switch Box Cover to expose the Micro Switch and Riser Cable.
4) Unscrew the Turnbuckle Nut on the Riser Cable Turnbuckle to free the Micro Switch's arm. Set the nut aside for reassembly.
5) Remove the Nuts and Lock Washers to access the Micro Switch. Set the hardware aside for reassembly.
6) Remove the Micro Switch from the mounting studs.

REPLACE MICRO SWITCH

1) Remove the wires, one at a time, and put each wire in the matching position on the new Micro Switch.
2) Place the newly wired Micro Switch on the mounting studs. Make certain the switch arm extends to the right. Use the Nuts and Lock Washers previously removed to secure the new Micro Switch.

   Note: *Do not over tighten the Nuts!*
3) Put the threaded end of the Riser Cable Turnbuckle through the hole in the arm of the Micro Switch. Use the previously removed Turnbuckle Nut (step 4) to secure the Turnbuckle to the switch arm.
4) Refer to the SUITMATE® UNIT MICRO SWITCH ADJUSTMENT PROCEDURE (Page 59) in this manual to properly adjust the Micro Switch.
5) After the Riser Cable is properly adjusted, replace the Micro Switch Box Cover and secure it in place using the previously removed or replacement screws.

WARNING! ***Make certain the foam seal on the Micro Switch Box Cover is not damaged so that water cannot enter the Micro Switch Box.***

6) Reinstall the SUITMATE® unit to the Wall Mount Bracket. See instructions beginning on Page 18.
7) Turn on the main electrical power to the unit and retest to assure proper operation. Refer to TESTING AND OPERATION on Page 8.

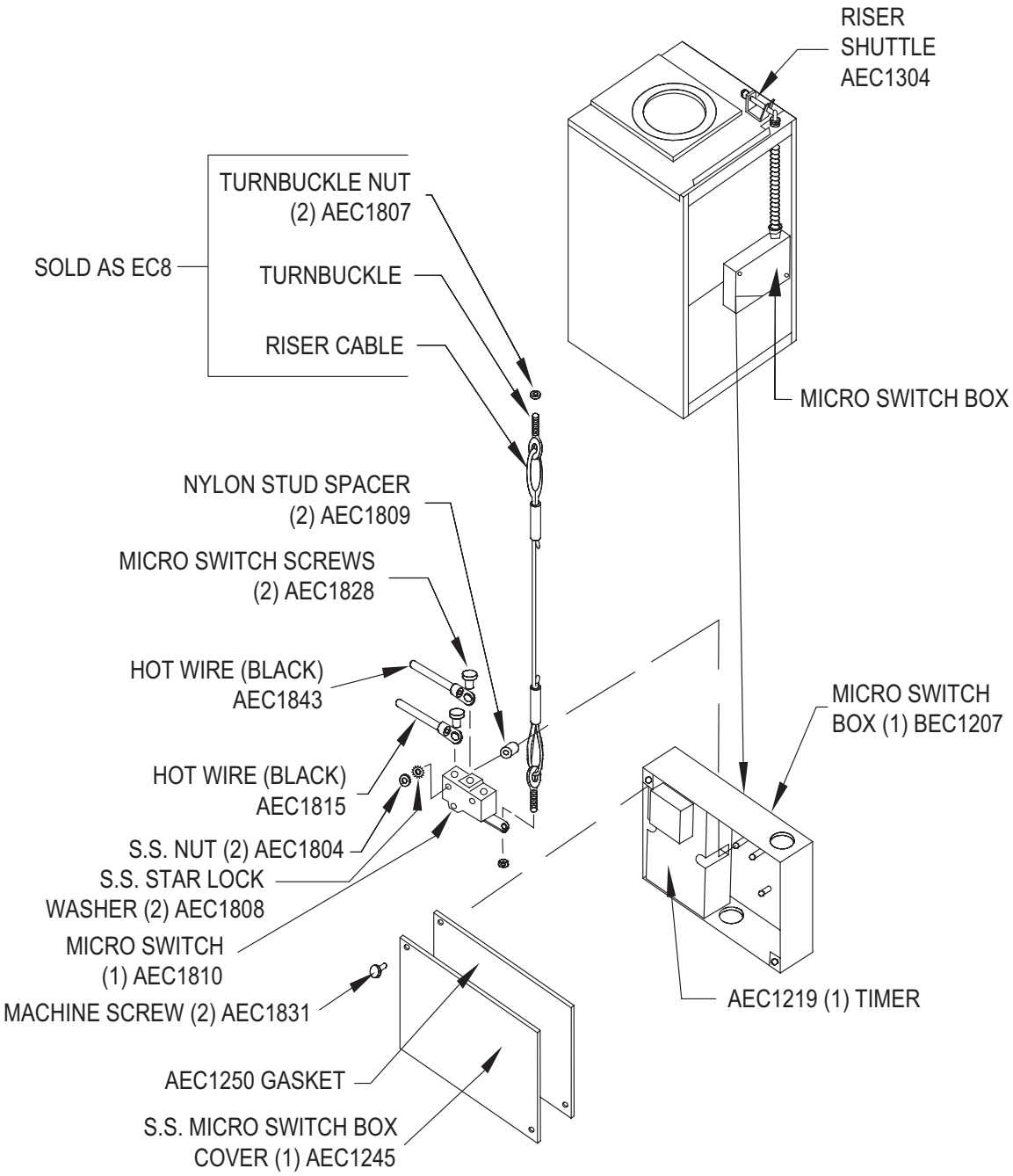

Refer to Wiring Diagram on Page 7 for details

REMOVE AND REPLACE TIMER

Do this FIRST

Make certain you have all the necessary parts and fasteners necessary for correct installation. Parts used in this process: (1) AEC1219 Timer, (4) AEC1809 Nylon Spacers, (2) AEC1808 Star Lock Washers, (2) AEC1804 S.S. Nuts, (2) AEC1831 Machine Screws, (1) AEC1250 Gasket, and (1) AEC1245 Micro Switch Box Cover.

REMOVE TIMER

1) Turn off the main electrical power to the unit – place a lockout tag on the circuit breaker panel indicating that the breaker is not to be turned on except by authorized personnel and disconnect the unit before doing any work on the SUITMATE® unit. Simply turning off a switch is NOT enough.
2) Remove SUITMATE® unit from the Wall Mount Bracket. See instructions beginning on Page 17. Place the SUITMATE® on its front side.
3) Remove the Micro Switch Box Cover to expose the Micro Switch and Riser Cable lower assembly by unscrewing (2) screws. Place the screws aside for reassembly later.
4) Remove the (2) Nuts, (2) Lock Washers and (4) Spacers to access the Timer. Set the hardware aside for reassembly.
5) Remove the Timer from the mounting studs.

REPLACE TIMER

1) Remove the wires, one at a time, and put each wire in the matching position on the new Timer.
2) Place the newly wired Timer on the mounting studs. Use the (4) Spacers (2) Nuts, and (2) Lock Washers previously removed to secure the new Timer.

   Note: *Do not over tighten the Nuts!*
3) Replace the Micro Switch Box Cover and secure it in place using the previously removed screws.

WARNING! ***Make certain the foam seal on the Micro Switch Box Cover is not damaged so that water cannot enter the Micro Switch Box.***

4) Reinstall the SUITMATE® unit to the Wall Mount Bracket. See instructions beginning on Page 18.
5) Turn on the main electrical power to the unit and retest to assure proper operation. Refer to TESTING AND OPERATION on Page 8.

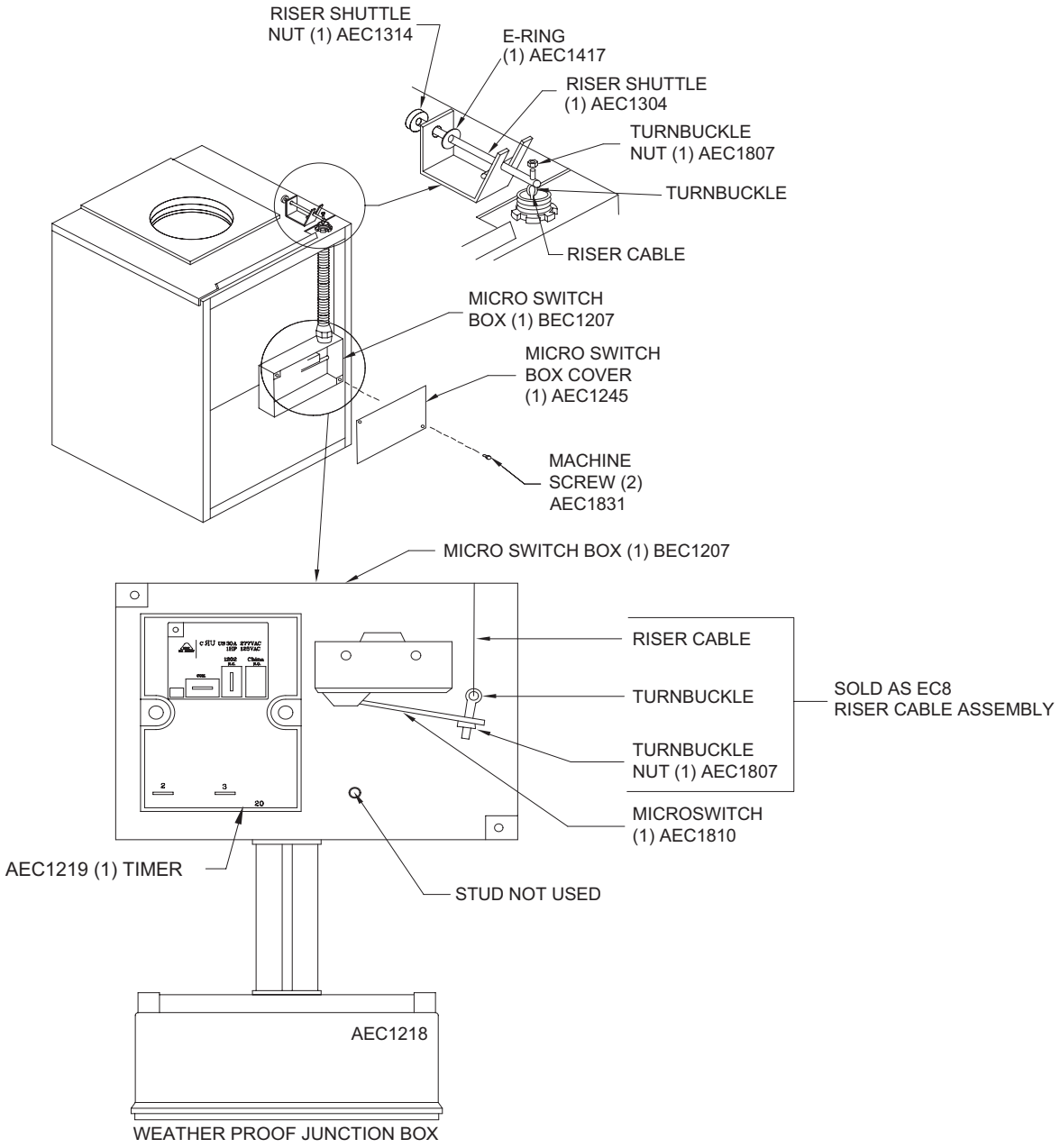
RISER SHUTTLE NUT (1) AEC1314
E-RING (1) AEC1417
RISER SHUTTLE (1) AEC1304
TURNBUCKLE NUT (1) AEC1807
TURNBUCKLE
RISER CABLE
MICRO SWITCH BOX (1) BEC1207
MICRO SWITCH BOX COVER (1) AEC1245
MACHINE SCREW (2) AEC1831
MICRO SWITCH BOX (1) BEC1207
RISER CABLE
TURNBUCKLE
TURNBUCKLE NUT (1) AEC1807
SOLD AS EC8 RISER CABLE ASSEMBLY
MICROSWITCH (1) AEC1810
AEC1219 (1) TIMER
STUD NOT USED
AEC1218
WEATHER PROOF JUNCTION BOX

MICRO SWITCH ADJUSTMENT PROCEDURE

Depress the Lid on the top of the unit and listen for the faint click (activation) of the Micro Switch. If the Micro Switch does not activate or if it activates before the Lid is ¼-inch from being fully depressed, there is probably a problem with the alignment of the Micro Switch. The following procedure will solve the alignment problem. Please consult the illustration (Page 58) showing the back of the SUITMATE® unit to identify the parts that you will need to recognize.

REMOVE SUITMATE® UNIT FROM THE WALL MOUNT BRACKET

1) Turn off the main electrical power to the unit – place a lockout tag on the circuit breaker panel indicating that the breaker is not to be turned on except by authorized personnel and disconnect the unit before doing any work on the SUITMATE® unit. Simply turning off a switch is NOT enough.
2) Remove the SUITMATE® unit from its Wall Mounting. See instructions beginning on Page 17.
3) Place the unit on its front side and remove the Micro Switch Box Cover to expose the Micro Switch and Riser Cable Assembly by unscrewing the (2) Machine Screws. Place the screws aside for reassembly later.

NOTE: *Older units may have rivets instead of screws.*

CAUTION! ***Make certain the main electrical power to the unit is turned off – and locked out – before beginning work on the SUITMATE® unit.***

CHECKING MICRO SWITCH ALIGNMENT

1) Stand the unit upright and reaching from the rear push the Lid down on the top of the unit to determine if the Riser Cable that runs from the top of the unit to the Micro Switch arm is pulling on the arm. If there is no movement, the Actuator Screw in the top may be broken and will need to be replaced. See the Lid Assembly section on Page 23 of this manual.
2) If the Cable does pull up on the Micro Switch arm, then the alignment can be adjusted. First, push the Lid down; the Micro Switch should NOT activate (click) until the Lid is approximately ¼ inch from being totally depressed. Adjust the alignment by tightening (clockwise will activate unit sooner) or loosening (counter clockwise will activate later) the Turnbuckle Nut on the bottom of the Riser Cable until the proper adjustment is obtained. Provide power to the unit and make certain that it is functioning properly.
3) Disconnect the power to the unit.
4) Replace the Micro Switch Box Cover using the (2) Machine Screws removed in step 3.

REATTACH THE SUITMATE® UNIT TO WALL

1) Reinstall the SUITMATE® unit to the Wall Mount Bracket. See instructions beginning on Page 18.
2) Turn on the main electrical power to the unit and retest to assure proper operation. Refer to TESTING AND OPERATION on Page 8.

If you have further difficulities or want additional information, please contact Extractor Corporation at: (Telephone) 800-553-3353, (Fax) 847-742-3552 or (E-Mail) info@suitmate.com and explain your problem.

EXPLODED VIEW

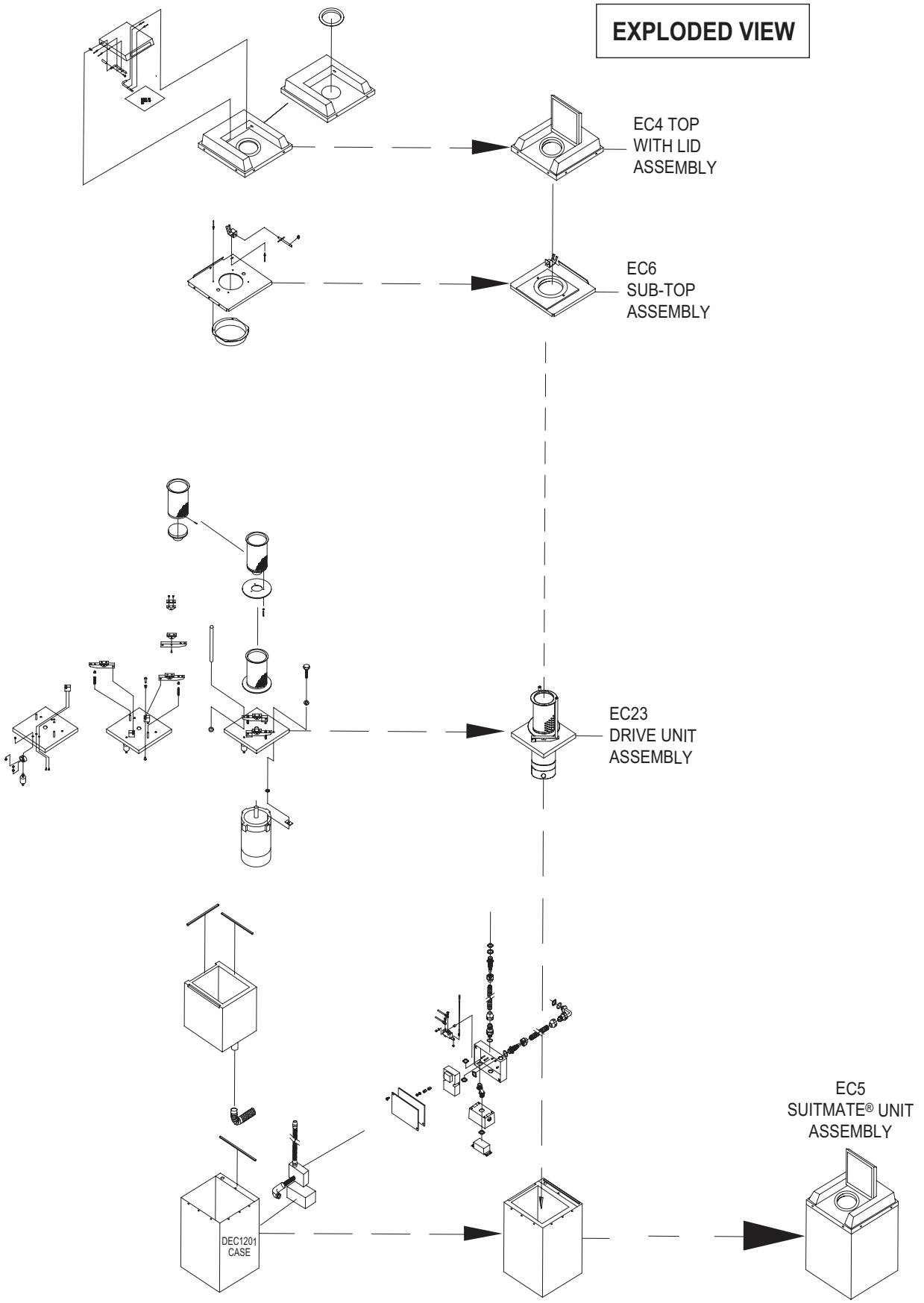

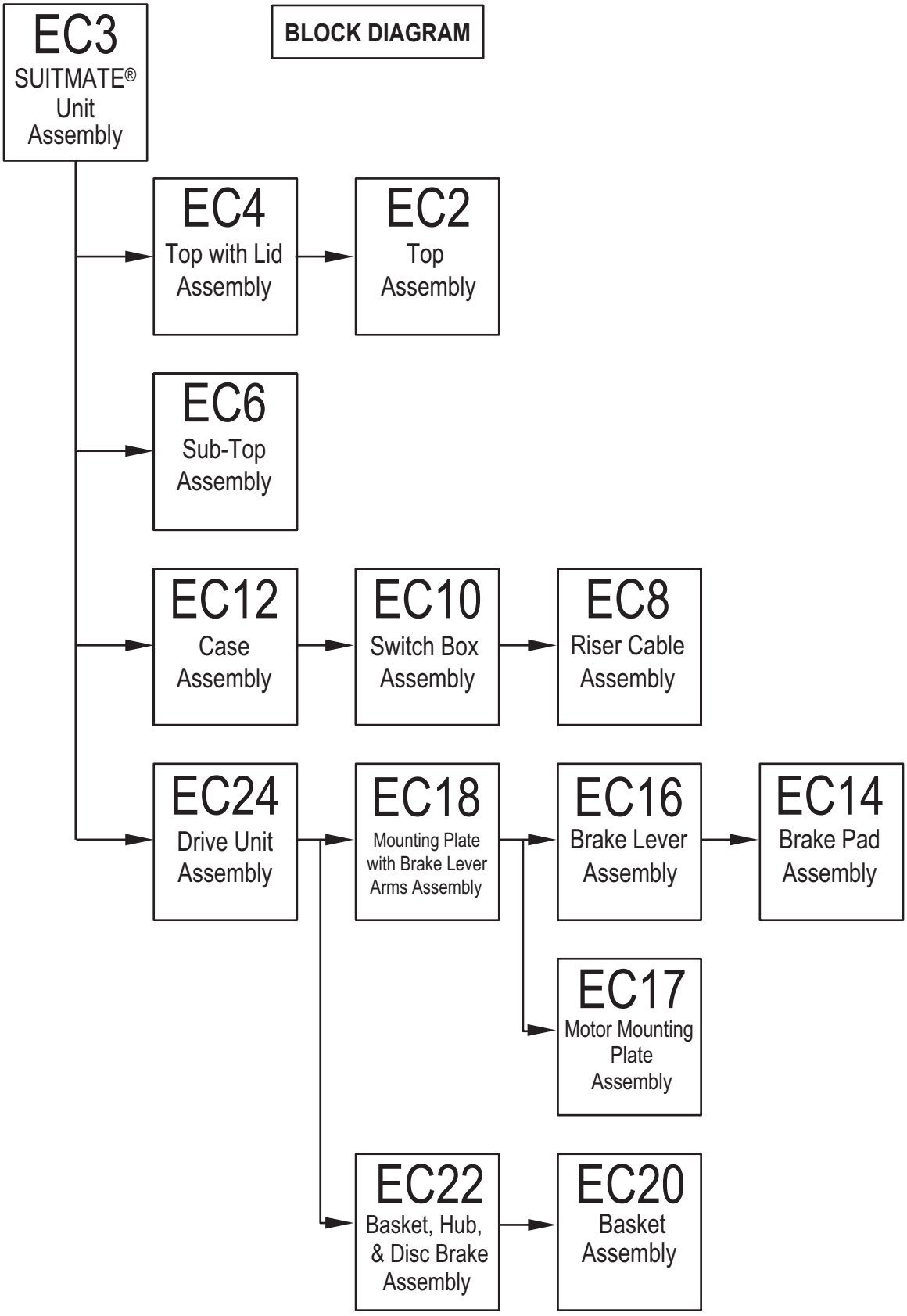
EC3
SUITMATE® Unit Assembly
BLOCK DIAGRAM
EC4
Top with Lid Assembly
EC2
Top Assembly
EC6
Sub-Top Assembly
EC12
Case Assembly
EC10
Switch Box Assembly
EC8
Riser Cable Assembly
EC24
Drive Unit Assembly
EC18
Mounting Plate with Brake Lever Arms Assembly
EC16
Brake Lever Assembly
EC14
Brake Pad Assembly
EC17
Motor Mounting Plate Assembly
EC22
Basket, Hub, & Disc Brake Assembly
EC20
Basket Assembly

SUITMATE® UNIT PARTS AND ASSEMBLY LIST

115-V 20-Amp 60-Hz Self-Timed Unit

PART NUMBER	DESCRIPTION	QUANTITY
EC2	**TOP ASSEMBLY**	**1**
EC4	**TOP ASSEMBLY WITH LID**	1
EC2	TOP ASSEMBLY	
CEC1402	S.S. LID	1
AEC1354	RUBBER LID BUMPER	2
BEC1403	S.S. HINGE PIN - LEFT	1
BEC1404	S.S. HINGE PIN - RIGHT	1
AEC1410	S.S. RIVET 1/8 X 3/8	4
AEC1416	BLACK O-RING	2
AEC1405	ACTUATOR SCREW - IN LEFT HINGE PIN	1
AEC1704	S.S. LOCK WASHER #8 *SOLD AS AEC2040*	1
AEC1804	S.S. STUD NUT 6-32	1
AEC1235	LID OPERATING INSTRUCTIONS	1
AEC1234	LIFT LID LABEL	1
AEC1205	BLACK ALUMINUM RIVET	6
EC6	**SUB-TOP ASSEMBLY**	**1**
CEC1301	S.S. SUB-TOP	1
BEC1303	S.S. RISER BRACKET	1
AEC1305	TEFLON TAPE - *Comes with BEC1303*	
AEC1208	S.S. RIVET 1/8 X 1/16	3
AEC1824	S.S. SUB-TOP RETAINER RING	1
AEC1208	S.S. RIVET 1/8 X 1/16	4
AEC1352	SUB-TOP GASKET	1
AEC1240	ALUMINUM RIVET 3/16 X 1/8	3
AEC1304	S.S. RISER SHUTTLE	1
AEC1314	S.S. RISER SHUTTLE NUT *SOLD AS AEC2020*	1
AEC1418	SHUTTLE SLIDE PIN	1
AEC1417	S.S. E-RING	1
EC8	**RISER CABLE ASSEMBLY**	**1**
AEC1307	RISER CABLE & SLEEVE	1
AEC1806	TURNBUCKLE *SOLD AS EC8*	2
AEC1807	TURNBUCKLE NUT *nut may be sold separately*	2
EC10	**SWITCH BOX ASSEMBLY**	**1**
EC8	RISER CABLE ASSEMBLY	1
BEC1207	S.S. MICRO SWITCH/TIMER BOX	1
AEC1245	S.S. MICRO SWITCH BOX COVER	1
AEC1250	FOAM GASKET - SWITCH BOX COVER	1
AEC1810	MICRO SWITCH	1
AEC1809	NYLON STUD SPACER	2

PRICES SUBJECT TO CHANGE WITHOUT NOTICE

SUITMATE® UNIT PARTS AND ASSEMBLY LIST

115-V 20-Amp 60-Hz Self-Timed Unit

PART NUMBER	DESCRIPTION	QUANTITY
EC10	**SWITCH BOX ASSEMBLY - *continued***	**1**
AEC1808	S.S. STAR LOCK WASHER 6/32	2
AEC1804	S.S. STUD NUT 6-32	2
AEC1356	CABLE CONDUIT - PLASTIC 8.50"	1
AEC1358	CONDUIT CONNECTOR - PLASTIC	1
AEC1214	LOCKNUT	1
AEC1815	BLACK HOT WIRE - 14.25"	1
AEC1828	MICRO SWITCH SCREW	2
	MICRO SWITCH STAR LOCK WASHER *(Comes with AEC1828)*	2
AEC1219	SOLID STATE TIMER ***other parts required for installation***	1
AEC1804	S.S. STUD NUT	2
AEC1808	S.S. STAR LOCK WASHER	2
AEC1809	NYLON STUD SPACER	4
AEC1840	BLACK WIRE - 16.5" W/ INSULATED CONNECTOR	1
AEC1841	WHITE WIRE - 28" W/ INSULATED CONNECTOR	1
AEC1842	BLACK WIRE - 31" W/ INSULATED CONNECTOR	1
AEC1843	BLACK WIRE - 8" W/ INSULATED CONNECTOR	1
AEC1831	MACHINE SCREW 6-32 X 3/8	2
EC12	**CASE ASSEMBLY**	**1**
EC10	SWITCH BOX ASSEMBLY	1
DEC1201	S.S. CASE	1
DEC1213	BLACK PLASTIC LINER	1
AEC1243	FOAM STRIP SEAL (ON BACK TOP OF CASE)	1
AEC1244	FOAM STRIP SEAL (ON TOP OF LINER)	4
AEC1823	S.S. RIVET 5/32 x 1/8	3
AEC1358	CONDUIT CONNECTOR - PLASTIC	1
AEC1214	LOCKNUT	1
EC14	**BRAKE PAD ASSEMBLY**	**2**
AEC1607	BRAKE PAD SUPPORT	1
AEC1608	BRAKE PAD	1
AEC1208	S.S. RIVET 1/8 X 1/16	2
EC16	**BRAKE LEVER ASSEMBLY**	**2**
EC14	BRAKE PAD ASSEMBLY	1
AEC1602	BRAKE LEVER ARM	1
AEC1208	S.S. RIVET 1/8 X 1/16	2
EC17	**MOTOR MOUNTING PLATE ASSEMBLY**	**1**
CEC1501	MOTOR MOUNTING PLATE	1
AEC1512	BRAKE SPRING GUIDE PIN *SOLD WITH CEC1501*	2
AEC1502	MOTOR SHAFT PROTECTOR *parts not sold separately*	1
AEC1601	BRAKE SUPPORT BRACKET	2

PRICES SUBJECT TO CHANGE WITHOUT NOTICE

SUITMATE® UNIT PARTS AND ASSEMBLY LIST

115-V 20-Amp 60-Hz Self-Timed Unit

PART NUMBER	DESCRIPTION	QUANTITY
EC17	**MOTOR MOUNTING PLATE ASSEMBLY - *continued***	**1**
AEC1823	S.S. RIVET 5/32 X 1/8	4
AEC1223	SHOCK BUMPER RING	3
AEC1228	S.S. FLAT WASHER #10	3
AEC1206	S.S. RIVET 3/16 X 1/4	3
AEC1202	BLACK SHOCK MOUNT	3
AEC1224	S.S. NUT 5/16	3
EC18	**MOUNTING PLATE / BRAKE LEVERS ASSEMBLY**	**1**
EC17	MOTOR MOUNTING PLATE ASSEMBLY	1
EC16	BRAKE LEVER ASSEMBLY	2
AEC1614	BRAKE HINGE PIN	2
AEC1603	WHITE PLASTIC BUSHING	4
AEC1827	NYLON WASHER	4
AEC1823	S.S. RIVET 5/32 X 1/8	2
AEC1612	S.S. COMPRESSION SPRING	2
AEC1609	S.S. FLAT WASHER 1/4	2
AEC1603	WHITE PLASTIC BUSHING	2
EC20	**BASKET AND HUB ASSEMBLY**	**1**
EC22	**BASKET AND BRAKE DISC ASSEMBLY**	**1**
EC20	BASKET ASSEMBLY	1
BEC1702	S.S. BRAKE DISC	1
AEC1703	S.S. PAN HEAD SCREW 8-32 X 1/2	3
AEC1704	S.S. LOCK WASHER #8	3
EC24	**DRIVE UNIT SUB-ASSEMBLY - 115 VOLT / 60 HZ**	**1**
EC18	MOUNTING PLATE / BRAKE LEVERS ASSEMBLY	1
EC22	BASKET AND BRAKE DISC ASSEMBLY	1
BEC1502	MOTOR - 115 VOLT / 60 HZ	1
AEC1504	MOTOR MOUNT SPACER	3
AEC1822	SPECIAL ALUMINUM SPACER	1
AEC1505	S.S. HEX HEAD BOLT 3/8 - 16 X 3/4	4
AEC1203	S.S. SPLIT LOCK WASHER 3/8	4
AEC1506	HUB ROLL PIN	1
AEC1620	THREADED S.S. BRAKE ROD	2
AEC1622	SHORT COMPRESSION SPRING — *SOLD AS AEC2030*	2
AEC1624	SS NYLOK LOCKNUT 1/4 - 20	2
EC3	**SUITMATE ASSEMBLY - 115 VOLT / 60 HZ**	
EC12	CASE ASSEMBLY	
EC24	DRIVE UNIT ASSEMBLY	
EC6	SUB-TOP ASSEMBLY	

PRICES SUBJECT TO CHANGE WITHOUT NOTICE

SUITMATE® UNIT PARTS AND ASSEMBLY LIST

115-V 20-Amp 60-Hz Self-Timed Unit

PART NUMBER	DESCRIPTION	QUANTITY
EC3	**SUITMATE ASSEMBLY - 115 VOLT / 60 HZ - *continued***	
EC4	TOP ASSEMBLY WITH LID	1
AEC1231	SUITMATE COLOR STRIP	1
AEC1605	RUBBER BRAKE TIP	2
AEC1218	GFCI JUNCTION BOX	1
AEC1220	GFCI JUNCTION BOX HOLE PLUG	1
AEC1247	GFCI JUNCTION BOX COVER	1
AEC1821	FACELESS GFCI	1
AEC1820	GFCI SCREW 6-32 X 3/4 PHILLIPS - *Comes with AEC1821*	2
AEC1233	GFCI JUNCTION BOX LABEL	1
AEC1212	OFFSET CONNECTOR	1
AEC1214	CONDUIT LOCKNUT	2
AEC1357	CABLE CONDUIT - PLASTIC 16.50"	1
AEC1360	CONDUIT CONNECTOR - 90º - PLASTIC	1
AEC1358	CONDUIT CONNECTOR - PLASTIC	1
AEC1214	LOCKNUT	1
AEC1813	NEUTRAL WIRE - WHITE - 34 3/4"	1
AEC2061	GROUND WIRE - GREEN - 34 3/4"	1
AEC1830	INSULATED CONNECTOR	2
AEC1819	FLANGE FORK CONNECTOR	2
AEC1819	FLANGE FORK CONNECTOR	4
AEC1224	S.S. NUT - 5/16	3
AEC1238	S.S. SPLIT LOCK WASHER 5/16	3
AEC1248	BLACK DRAIN HOSE	1
AEC1249	S.S. HOSE CLAMP	1
AEC1236	SERIAL NUMBER IDENTIFICATION LABEL	1
	MOTOR PARTS	
AEC1905	MOTOR SWITCH	1
AEC1906	MOTOR CAPACITOR	1
AEC1907	MOTOR END FRAME	1
AEC1908	MOTOR THERMAL BREAKER	1
AEC1909	MOTOR BEARING	1
AEC1910	MOTOR END CAP	1
	OTHER SUITMATE PARTS AND KITS	
AEC1102	S.S. WALL MOUNT BRACKET	1
AEC1104	INSTALLATION MANUAL	1
AEC1106	WALL SIGN - TIMED UNIT	1
AEC1107	WARNING WALL SIGN	1
AEC2020	RISER SHUTTLE KIT	1
AEC2030	BRAKE ROD KIT	1

PRICES SUBJECT TO CHANGE WITHOUT NOTICE

SUITMATE® UNIT PARTS AND ASSEMBLY LIST

115-V 20-Amp 60-Hz Self-Timed Unit

PART NUMBER	DESCRIPTION	QUANTITY
	OTHER SUITMATE PARTS AND KITS - ***continued***	
AEC2040	ACTUATOR SCREW KIT	1
AEC2045	REPLACEMENT SHIPPING BOX KIT	1
AEC2200	MOTOR PARTS KIT *(MOTOR SOLD SEPARATELY)*	1
AEC2250	TIMER CONVERSION KIT	1
AEC2300	BRAKE & PARTS KIT	1

PRICES SUBJECT TO CHANGE WITHOUT NOTICE

SUITMATE®

Extractor Corporation
685 Martin Drive
Post Office Box 99
South Elgin, IL 60177
(847) 742-3532
(800) 553-3353
Fax: (847) 742-3552

WARRANTY

Extractor Corporation ("EC") warrants to the purchaser of their manufactured equipment that for one (1) year after the purchase the equipment shall be free from any defects in workmanship.

Purchaser agrees that as a pre-condition to any EC liability hereunder, purchaser shall fully inspect all goods immediately upon delivery to purchaser and shall give EC written notice of any claim or purported defect within ten (10) days after discovery of such defect. As a further pre-condition to any EC liability to any EC liability hereunder, purchaser shall return said purportedly defective equipment, freight prepaid, to the plant of the manufacturer. EC shall inspect all returned equipment, and, if said equipment is found defective, shall, at its option as purchase's sole and exclusive remedy, repair or replace such equipment or any defective component or part thereof which proves to be defective, or refund the net purchase price paid by the original purchaser. Alterations or repairs by others or operation of such equipment in a manner inconsistent with EC accepted practices and all operating instructions shall void this warranty. EC shall not be for defects caused by the effects of normal wear and tear, erosion, fire or explosion.

EC's sole and exclusive liability under this warranty is to the original purchaser and shall not exceed the lesser of the cost of repair, cost of replacement, or refund of net purchase price paid by the original purchaser. EC is not liable for any other losses, damages, or costs of delays, including incidental or consequential damages. EC SPECIFICALLY MAKES NO WARRANTIES OR GUARANTEES, EXPRESSED OR IMPLIED, INCLUDING THE WARRANTIES OR MERCHANTABILITY OR FIT-NESS FOR A PARTICULAR PURPOSE OR USE, OTHER THAN OR WHICH EXTEND THOSE WARRANTIES EXPRESSED HEREIN.

Extractor Corporation

685 Martin Drive
Post Office Box 99
South Elgin, Illinois 60177
USA

Fax: (847) 742-3552
Email: info@suitmate.com