AquaSense®
TAG _____

ZERK-CPM

Sensor Operated Battery Powered Retrofit Kit for Water Closet and Urinal Flush Valves

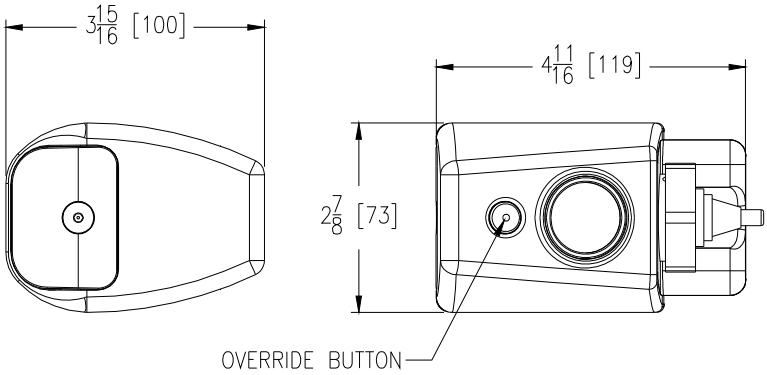

ADA DESIGNED

Accessories

- ☐ **-CB** Cambridge Brass Retro Fit
- ☐ **-GM** Sloan/Gem Retro Fit
- ☐ **-HMK** Highmount Adapter
- ☐ **-LY** Delaney Valve Retro Fit
- ☐ **-MC** Metroflush/Crown Valve Retro Fit
- ☐ **-_____** Other

Architectural/Engineering Approval

The information contained in this document is subject to change without notice.
Please contact Zurn for most up to date information.

Engineering Specifications

AquaSense® E-Z Flush Unit designed to provide automatic flushing for urinals and/or water closet flush valves.

- Chrome Plated Metal Cover
- Sensor
  - Infrared
  - User in-view L.E.D
  - Low battery indicator light
  - 24 hour auto-flush setting
  - 3 second delay flush
- Override Button
- 6 VDC Motor Actuator
  - Ultra energy efficient electronics
  - 4 "C" size batteries (Included)
- ADA Compliant
- Included tools
  - Wrench for installation
  - Allen key for battery compartment

ZURN INDUSTRIES, LLC. ♦ COMMERCIAL BRASS OPERATION
5900 ELWIN BUCHANAN DRIVE ♦ SANFORD NC 27330
PHONE: 1-800-997-3876 ♦ FAX: 919-775-3541
WWW.ZURN.COM
IN CANADA: ZURN INDUSTRIES LIMITED
3544 NASHUA DRIVE ♦ MISSISSAUGA, ONTARIO L4V1L2
PHONE: 905-405-8272 FAX: 905-405-1292

AquaSense® is a registered trademark of Zurn Industries, LLC.

Rev. C
Dwg. No. 66971
Date: 3/19/12
Product No. ZERK-CPM

BERL'S COMMERCIAL SUPPLY BERLS.COM (704) 937-2673 129 Oakpark Drive, Unit A, Mooresville, NC 28115