BOBRICK

Technical Data

# DOUBLE TOILET TISSUE DISPENSER

# B-547

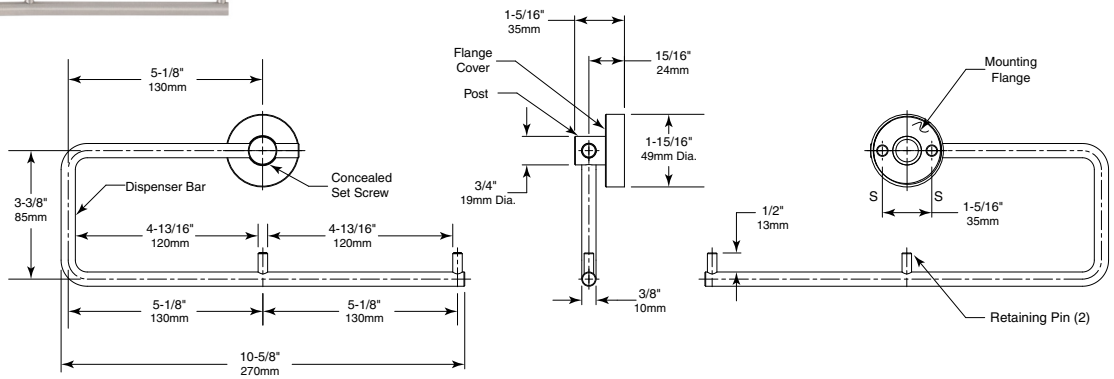


## MATERIAL:

**Post —** 18-8, Type-304, 19mm (3/4") diameter, solid stainless steel rod. Post and Concealed Mounting Threaded Flange are machined as one piece.

**Dispenser Bar —** 18-8, Type-304, 9.5mm (3/8") diameter, solid stainless steel rod. Secured to Post with a concealed set screw allowing for right or left handed assembly.

**Retaining Pins (2) —** 18-8, Type-304, 6.4mm (1/4") diameter, solid stainless steel rod press fit and secured into Dispenser Bar.

**Concealed Mounting Threaded Flange —** 18-8, Type-304, 5.6mm (7/32") thick, stainless steel plate with thread on outside edge for fastening cover. 46mm (1-13/16") outside diameter with two holes for attachment to wall.

**Threaded Flange Cover —** 18-8, Type-304, 1.4mm (17-gauge), machined stainless steel. 49mm (1-15/16") diameter 13mm (1/2") deep. Cover fastens over mounting flange to conceal mounting screws.

## INSTALLATION:

For plaster or dry wall construction, provide concealed backing to comply with local building codes, then secure unit with sheet-metal screws (not furnished). For other wall surfaces, provide fiber plugs or expansion shields for use with sheet-metal screws (not furnished), or provide 3mm (1/8") toggle bolts or expansion bolts.

For partitions with particle-board or other solid core, secure with sheet-metal screws (not furnished), or provide through-bolts, nuts, and washers. For hollow-core metal partitions, provide solid backing into which the sheet-metal screws (not furnished) can be secured.

## SPECIFICATION:

Double Toilet Tissue Dispenser shall be type-304 stainless steel with satin finish. Toilet Tissue Dispenser shall have 19mm (3/4") diameter Post. Dispenser bar shall be 9.5mm (3/8") diameter, secured to Post with a concealed set screw allowing for right or left handed assembly. Retaining pin shall be 6.4mm (1/4") diameter and pressed into Dispenser bar. Concealed mounting flange shall be 5.6mm (7/32") thick stainless steel plate, 46mm (1-13/16") outside diameter and equipped with two screw holes for attachment and thread on outside edge to fasten cover. Threaded flange cover shall be 1.4mm (17-gauge) stainless steel, 49mm (1-15/16") diameter and shall fasten over mounting flange to conceal mounting screws. Post and mounting flange are to be machined as one piece.

**Double Toilet Tissue Dispenser shall be Model B-547 of Bobrick Washroom Equipment, Inc., Clifton Park, New York; Jackson, Tennessee; Los Angeles, California; Bobrick Washroom Equipment Company, Scarborough, Ontario; Bobrick Washroom Equipment Pty. Ltd., Australia; and Bobrick Washroom Equipment Limited, United Kingdom.**

The illustrations and descriptions herein are applicable to production as of the date of this Technical Data Sheet.
The manufacturer reserves the right to, and does from time to time, make changes and improvements in designs and dimensions.

Revised 12/7/18
© 2018 by Bobrick Washroom Equipment, Inc.