AMERICAN SPECIALTIES, INC.
441 Saw Mill River Road, Yonkers, NY 10701 (914) 476-9000
www.americanspecialties.com

MODEL No:	1000
ISSUED:	7-03
REVISED:	03-09

CIRCULAR COUNTERTOP WASTE CHUTE

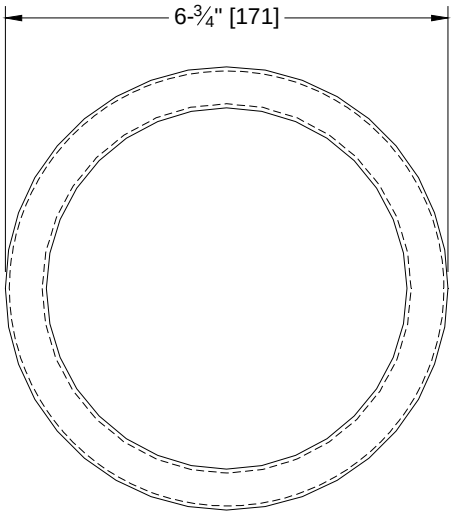

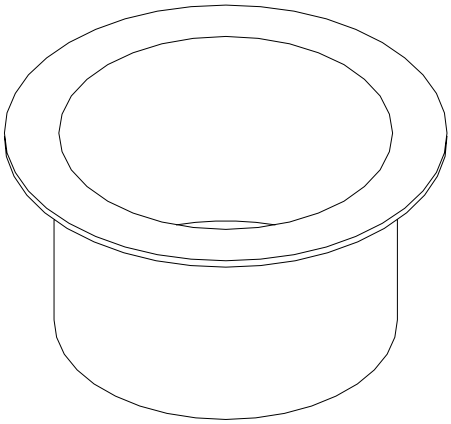

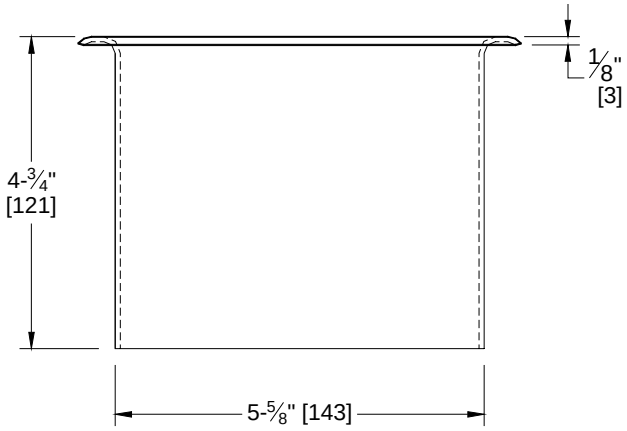

NOTE:ALL DIMS
INCH [MM]

ROUGH COUNTERTOP OPENING:
5-3/4" DIA [Ø146]

SPECIFICATION

Circular waste chute shall be fabricated from heavy gauge alloy 18-8 stainless steel, type 304. All exposed rolled flange and interior surfaces of the chute shall have satin finish. Unit provides waste deposit access to receptacle (not furnished) placed under countertop opening.

Circular countertop Waste Chute shall be Model Nº 1000 as manufactured by American Specialties Inc., 441 Saw Mill River Road, Yonkers, New York 10701-4913

INSTALLATION

Unit is designed for permanent installation in 5-¾" diameter (Ø146) hole in any countertop. Fill in underside of waste chute lip and around portion of waste chute body that protrudes down into mounting hole with silicone sealant (not furnished). Install unit into countertop hole. Once unit is set in place, wipe off any excess silicone sealant with a clean rag.

Accessory Specialties AMERICAN DISPENSER Desert Ray Products WATROUS, INC.

THIS MANUFACTURER RESERVES THE RIGHT TO MAKE CHANGES IN DESIGN OR DIMENSIONS WITHOUT FORMAL NOTICE

BERL'S COMMERCIAL SUPPLY BERLS.COM (704) 937-2673 129 Oakpark Drive, Unit A, Mooresville, NC 28115