# 9538, 9539

## Shower Curtain Rod

- ☑ Concealed Mounting
- ☑ Model 9538 – 1" O.D.
  - ☐ (36" Long) ***Bradex***®
  - ☐ (42" Long) ***Bradex***®
  - ☐ (48" Long) ***Bradex***®
  - ☐ (60" Long) ***Bradex***®
  - ☐ (72" Long) ***Bradex***®
- ☑ Model 9539 – 1-1/4" O.D.
  - ☐ (36" Long) ***Bradex***®
  - ☐ (42" Long)
  - ☐ (48" Long) ***Bradex***®
  - ☐ (60" Long) ***Bradex***®
  - ☐ (72" Long)

*For 72" lengths and greater, model 9522 Shower Rod Ceiling Support is required! Must specify distance from the ceiling!*

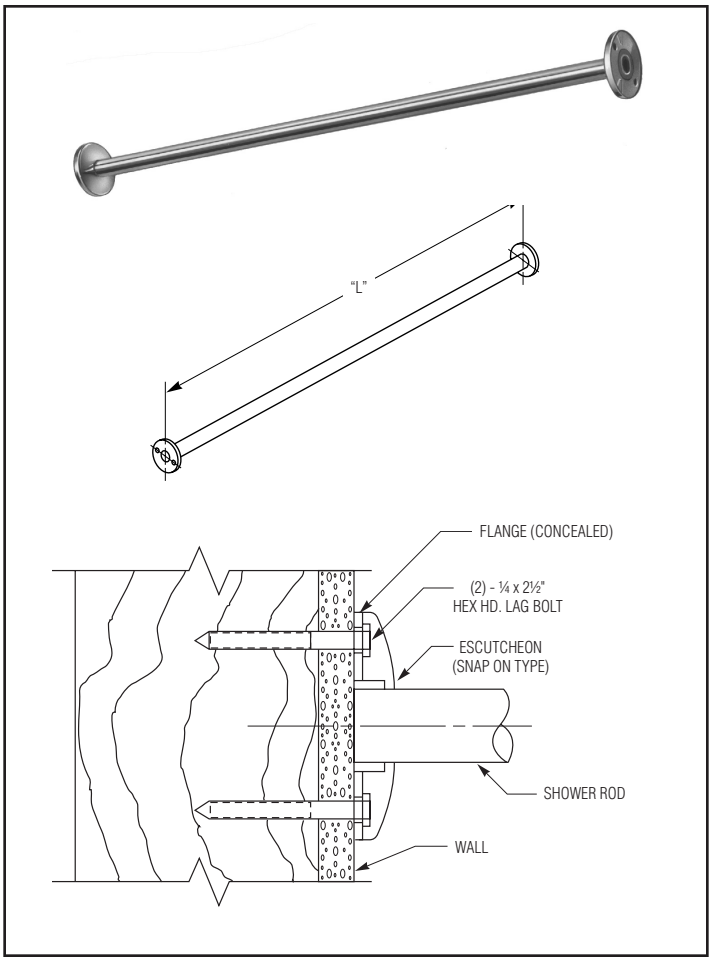


## Product Materials

**FLANGES:** glass polypropylene, 3⅛" dia. Shower rod support sleeves formed with flange as one piece.

**ESCUTCHEONS:** 22 gauge stainless steel. One-piece drawn construction with exposed surfaces in architectural satin finish. Snap over flanges to conceal mounting screws.

**TUBING:** 18 gauge stainless steel, seamless construction with exposed surfaces in architectural satin finish.

## Installation

Verify all rough-in dimensions prior to installation. To properly engage rod in support sleeves, rod length must be no less than approximately ¼" shorter than wall opening. Secure one flange to wall with mounting screws (included) at holes provided. Align mounting holes vertically. Slip opposite flange and both escutcheons into place. Secure flange to wall and snap escutcheons over mounting flanges.

## Optional Features

| Feature | | Suffix |
|---|---|---|
| ☐ | Bright polished finish | -4 |

## Guide Specification

Concealed mounted shower rod shall be fabricated of 18 gauge stainless steel of seamless construction. Mounting flanges shall be of glass polypropylene with snap-on vandal-resistant protective escutcheons.

Orders composed of products indicated as ***Bradex***® will be available to ship in three days after receipt of order at the factory. There is no pricing penalty for this service from Bradley.


This information is subject to change without notice.


© 2017 Bradley
P.O. Box 309, Menomonee Falls, WI 53052-0309
800 BRADLEY (800 272 3539) +1 262 251 6000
bradleycorp.com

BERL'S COMMERCIAL SUPPLY BERLS.COM (704) 937-2673 129 Oakpark Drive, Unit A, Mooresville, NC 28115