953, 9531

Shower Curtain Rod

- ☑ Exposed Mounting
- ☑ Model 953 – 1" O.D.
  - ☐ 36" ***Bradex***®
  - ☐ 42"
  - ☐ 48" ***Bradex***®
  - ☐ 60" ***Bradex***®
  - ☐ 72" ***Bradex***®
- ☑ Model 9531 – 1¼" O.D.
  - ☐ 36" ***Bradex***®
  - ☐ 42" ***Bradex***®
  - ☐ 48" ***Bradex***®
  - ☐ 60" ***Bradex***®
  - ☐ 72"

For 72" lengths and greater, model 9522 Shower Rod Ceiling Support is required! Must specify distance from the ceiling!

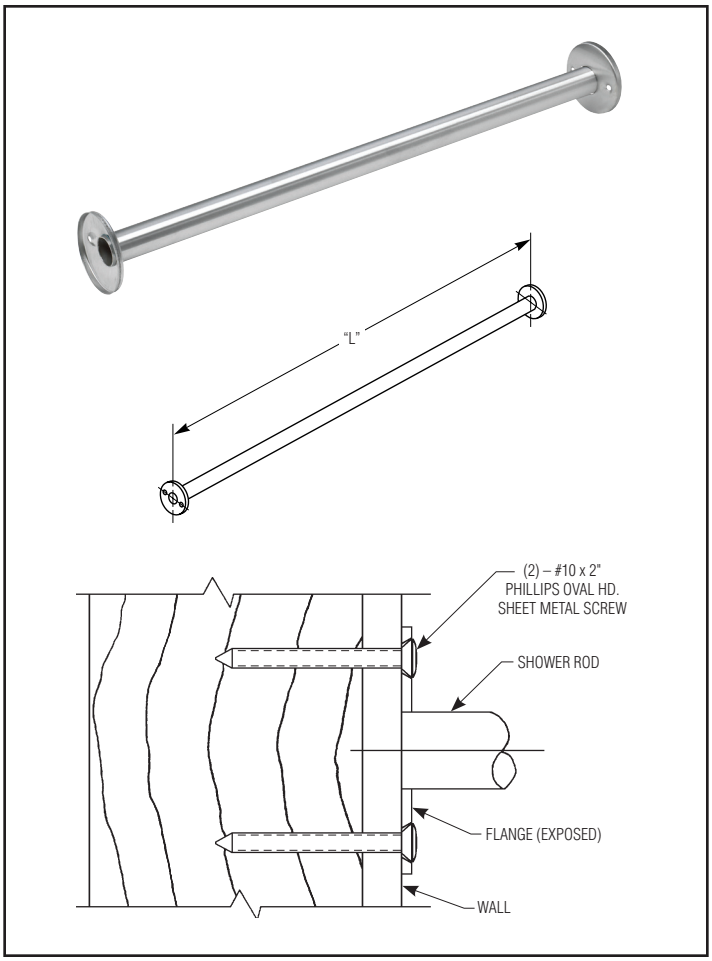

Product Materials

FLANGES: 22 gauge stainless steel. One-piece drawn construction with exposed surfaces in architectural satin finish.

TUBING: 18 gauge stainless steel, seamless construction with exposed surfaces in architectural satin finish.

Installation

Verify all rough-in dimensions prior to installation. To properly engage rod in support flanges, rod length must be no less than approximately ¼" shorter than wall opening. Secure one flange to wall with mounting screws (included) at holes provided. Align mounting holes vertically. Slip opposite flange over rod and secure to opposite wall with rod in place.

Optional Features

Feature		Suffix
☐	Bright polished finish	**-4**

Guide Specification

Shower curtain rod shall be fabricated of 18 gauge stainless steel in satin finish. Flanges shall be of 22 gauge stainless steel.

Orders composed of products indicated as ***Bradex***® will be available to ship in three days after receipt of order at the factory. There is no pricing penalty for this service from Bradley.

This information is subject to change without notice.

© 2017 Bradley
P.O. Box 309, Menomonee Falls, WI 53052-0309
800 BRADLEY (800 272 3539) +1 262 251 6000
bradleycorp.com

BERL'S COMMERCIAL SUPPLY BERLS.COM (704) 937-2673 129 Oakpark Drive, Unit A, Mooresville, NC 28115