6501
Soap Dispenser

- ✔ Liquid Soap Dispenser ***Bradex®***
- ✔ Pushup-Type Soap Valve
- ✔ Surface-Mounted

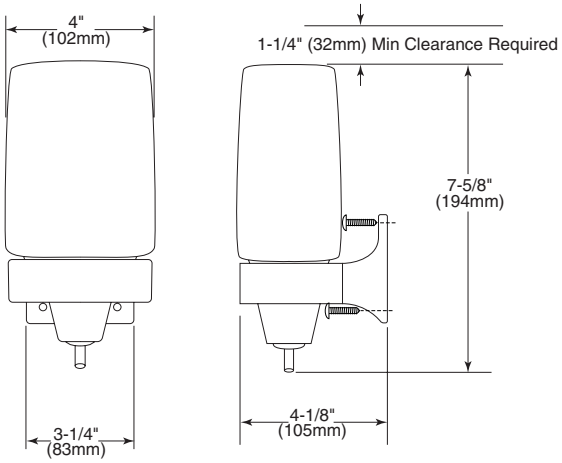

Product Materials

BRACKET AND COLLAR: vandal-resistant, chrome-plated ABS.

CONTAINER: translucent polyethylene, providing visible liquid level and a 24 fl. oz. capacity.

VALVE: corrosion-resistant black ABS with stainless steel spring, and is secured to the base with the collar for increased vandal resistance.

Capacity

24-oz. liquid soap.

Operation

Pushup-type valve delivers a measured amount of thin liquid soaps, synthetic detergents, and vegetable oil soaps. Removing collar from base allows vandal-resistant valve to be removed from container for filling.

- ✔ Bradley liquid soap valves operate best with any vegetable oil or coconut oil hand soap having a 10–15% soap concentration.

Installation

Verify all rough-in dimensions prior to installation. Secure bracket to wall with four screws provided at points indicated in diagram.

Guide Specification

Soap and Detergent Dispenser shall be able to dispense thin liquid soaps, synthetic detergents, and vegetable oil soaps. Capacity: 24-oz. liquid soap.

Orders composed of products indicated as ***Bradex®*** will be available to ship in three days after receipt of order at the factory. There is no pricing penalty for this service from Bradley.

This information is subject to change without notice.

© 2014 Bradley
P.O. Box 309, Menomonee Falls, WI 53052-0309
800 BRADLEY (800 272 3539) +1 262 251 6000
bradleycorp.com

BERL'S COMMERCIAL SUPPLY BERLS.COM (704) 937-2673 129 Oakpark Drive, Unit A, Mooresville, NC 28115